A·J·S Motor Cycles

1929 LIST OF SPARE PARTS FOR All Models.

1st EDITION.

A. J. Stevens & Co. (1914) Ltd.

WOLVERHAMPTON,

TELEPHONE. 1731
(Five Lines.)

CODES.
A.B.C. 5th Edition.
A.B.C. 6th Edition.
Bentley's.
Marconi International

TELEGRAMS.
"HOPIT, Wolverhampton."

Price 2/6

This scan is explicit for non-commercial use and is not intended for financial or material gain by anyone

1929 SPARE PARTS LIST.

INSTRUCTIONS TO BE OBSERVED.

(1) Correspondence.

All correspondence and parcels must be addressed to the firm, at our Head Offices as below, and not to individuals:

Messrs. A. J. STEVENS & Co. (1914) Ltd.,
GRAISELEY HOUSE,
WOLVERHAMPTON.

It will greatly facilitate prompt attention to Clients' correspondence or requirements if letters or goods are addressed, **in addition,** to the department concerned. By observing this simple rule the execution of orders will be greatly expedited.

(2) Departments.

THE MAIN DEPARTMENTS ARE AS FOLLOWS:—

New Machines	Sales Department.
New Machines for Export ...	Export Sales Department.
Repairs, Overhauls or Replacements of Parts under Guarantee	Repair Department.
Spare Parts	Spare Parts Department.
Spare Parts for Export ...	Export Spare Parts Department
Accounts	Accounts Department.

(3) Posting of Orders.

The earlier letters and orders are posted the better. Unless such arrive for delivery here early in the day, it is impossible to ensure despatch of reply or goods by return of post.

This scan is explicit for non-commercial use and is not intended for financial or material gain by anyone

(4) Accessories omitted.

We have decided to cease stocking Spares for Magdynos, Magnetos, Lamps, Horns, etc., and all Carburettor Controls and Parts. With each machine we supply a copy of the Spares List issued by the makers of these Parts. We advise Clients to obtain their requirements from the nearest A. J. S. Service Dealer or direct from the Makers of these articles.

(5) Instructions for and Labelling of Parts sent to Works and for Estimates.

Parts sent to us to be repaired, replaced or as patterns, should bear distinctly the sender's full name and address, and explicit instructions should be sent by the same post in a separate letter of advice stating specifically what is required. We are sometimes asked by Clients when sending their Engines or Motor Cycles, etc., for repairs or overhauls to furnish an **Estimate** for the necessary work. We are pleased to do this on the distinct understanding that we reserve the right to charge for any extra work or new parts found necessary to put such machine or engine, etc., in good running order, which it may have been impossible to detect when dismantling. We prefer not to undertake a repair or overhaul (nor do we accept any responsibility) when the estimate for same has been curtailed by the owner. If an estimate is not accepted after tender, a charge is made for taking down, re-assembling and preparing the estimate.

(6) Return of Old Parts.

It is **Important** that we should be instructed if old parts are required to be returned, as they cannot be held in reserve at our works beyond **seven days** from date of completion of order.

(7) Removal of all Accessories from Machines.

When forwarding a complete Motor Cycle, do not fail to remove all accessories, such as lamp, horn, tools, badges, etc., otherwise we cannot be held responsible for their safe return, although we take every possible precaution in this respect.

(8) Carriage and Packing Charges. Rail and Post.

All goods sent as patterns or for repairs must be consigned **Carriage Paid** or we cannot accept delivery of same. All rail goods returned by us will be sent **passenger train** unless other instructions are received. Packing Boxes, Crates, etc, are charged at cost, and are strictly **Non-Returnable.**

All goods to Spares Orders, where the maximum weight is under 1-lb. are sent per letter post (unless specified otherwise) in order to curtail postage expenses as much as possible since these are borne by the Client. No claim, however, can be made on the Post Office if a parcel is lost when sent by letter post.

(9) Registration of Letters containing Money.

When treasury notes or coin is remitted **Do not f to Register the Letter,** as otherwise we do not accept responsibility for the correct amount reaching us.

(10) Money in Parcels.

Please do not enclose cheques or money of any kind in parcels sent to the Company. All payments should be made through separate post and the amount stated in letter. We accept no responsibility for loss if money is enclosed in parcels.

(11) Terms, Cheques, Deposit Accounts.

Our terms are strictly **Nett Cash** with order, or cash against **Pro Forma Invoice.** All cheques and postal orders must be made payable to A. J. Stevens & Co. (1914) Ltd., and **Crossed.** If the amount remitted is in excess of cost, the balance will be returned. If customers desire a Deposit Account can be opened.

(12) C.O.D. System.

We prefer not to send goods by the Cash on Delivery System. **C.O.D.** orders cannot be executed with such speedy despatch as other orders, owing to the extra time involved in making out the various official forms, special labels, etc., as required by the Postmaster General.

(13) Telegraphic Orders.

If Parts are urgently wanted and it is necessary to send us a telegram do not fail to include **Full Name and Full Address** in the message. Unless this is done the Post Office do not give this information in the telegram. The omission of this information necessitates the goods being held back until confirmation is received by post. Orders or instructions received by telegram or over the 'phone must be confirmed by letter enclosing remittance.

(14) Loss in Transit.

In the event of loss or damage to goods when in transit whether sent letter post, parcel post, or rail, we hold no responsibility whatever, and all claims for compensation must be made by Clients direct to the Post Office or Railway Authorities.

(15) Despatch of Goods.

Every effort is made to despatch goods ordered by return, but if the works are temporarily out of stock of certain items, the whole order is held back until we can execute in full, unless instructions to the contrary are given by Clients on their order.

This scan is explicit for non-commercial use and is not intended for financial or material gain by anyone

List of 1929 Models.

Model M1	De Luxe Passenger Combination ...	9.96 h.p.
Model M2	Standard Passenger Combination ...	9.96 h.p.
Model M3	De Luxe Side Valve Touring Machine	3.49 h.p.
Model M4	De Luxe Side Valve Sporting Machine	3.49 h.p.
Model M5	Standard Side Valve Sporting Machine	3.49 h.p.
Model M6	Overhead Valve Machine	3.49 h.p.
	(This Model is also supplied with Two Port Exhaust.)	
Model M7	Overhead Camshaft Machine ...	3.49 h.p.
Model M8	Overhead Valve Machine	4.98 h.p.
	(This Model is also supplied with Two Port Exhaust.)	
Model M9	De Luxe Side Valve Touring Machine...	4.98 h.p.
Model M10	Overhead Camshaft Machine ...	4.98 h.p.
Model M12	Lightweight Machine	2.48 h.p.

When the Model is in doubt quote Engine Number stamped on Brass Plate on the driving side of Crankcase. (See illustration below).

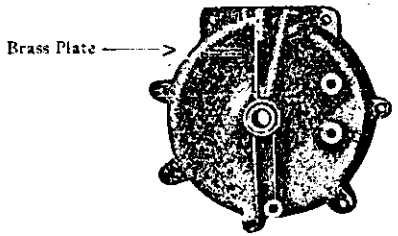

The Prices given in this Catalogue are subject to alteration without notice, and we reserve the right to charge for all Parts supplied at prices ruling at time of delivery.

A. J. STEVENS & CO. (1914) LTD.

DECEMBER, 1928.

Explanation of Numbering System.

A new system of numbering Spare Parts is being commenced in this List. This is based on the use of an Initial Letter which differs with the various sections in the book, and a second letter which will change each year in the case of an entirely new Part, thus definitely denoting the year.

In cases where Parts are **New** this year, new numbers are allotted. When Parts are **Old**, but are used on additional models this year, new numbers are allotted, but only in the columns where the use is **New.**

In the last column on the descriptive pages (marked "For Dealer's Use,") the letter "O" (meaning "**Old**") will be found against certain Parts. This letter indicates that these Parts were used on 1928 or earlier models.

The figures in the first column (headed Illustration Number) refer to the illustrations and must **Not** be used for ordering. The letters "N.I." indicate that the Part is not illustrated.

The Engine Numbers used on 1929 Models commence approximately as follows:—

M1	61140—
M2	45988—46000 50126—
M3	68726—
M4	125671—
M5	113526—
M6	103288—103312
... ...	103563—
M7	46775—
M8	93406—93430 94681—
M9	130151—
M10	120072—120100 89620—89752
M12	122851—

This scan is explicit for non-commercial use and is not intended for financial or material gain by anyone

WIDE RATIO.

9.96-h.p., 4.98-h.p. Gear Ratio Chart, M1, M2, M8, M9.

Engine Sprocket.	Top Gear.	Second Gear.	Bottom Gear.
15	6.239	11.230	20.375
16	5.849	10.528	19.098
17	5.505	9.909	17.975
18	5.199	9.358	16.976
19	4.925	8.866	16.092
20	4.679	8.422	15.278
21	4.456	8.021	14.551
22	4.254	7.657	13.889
23	4.069	7.324	13.286

WIDE RATIO.

3.49-h.p. Gear Ratio Chart, M3, M4, M5.

Engine Sprocket.	Top Gear.	Second Gear.	Bottom Gear.
15	7.733	13.024	19.798
16	7.250	12.210	18.560
17	6.823	11.492	17.468
18	6.444	10.854	16.498
19	6.105	10.279	15.629
20	5.800	9.768	14.848
21	5.524	9.303	14.141
22	5.273	8.880	13.498
23	5.043	8.494	12.911
24	4.833	8.140	12.373

CLOSE RATIO.

4.98-h.p. Gear Ratio Chart, M8, M9, M10.

Engine Sprocket.	Top Gear.	Second Gear.	Bottom Gear.
15	6.239	7.552	12.273
16	5.849	7.080	11.506
17	5.505	6.664	10.829
18	5.199	6.293	10.227
19	4.925	5.962	9.684
20	4.679	5.664	9.204
21	4.456	5.395	8.766
22	4.254	5.145	8.368
23	4.069	4.925	8.004

CLOSE RATIO.

3.49-h.p. Gear Ratio Chart, M6, M7.

Engine Sprocket.	Top Gear.	Second Gear.	Bottom Gear.
15	7.733	9.497	14.536
16	7.250	8.903	13.627
17	6.823	8.379	12.826
18	6.444	7.914	12.113
19	6.105	7.497	11.476
20	5.800	7.123	10.902
21	5.524	6.783	10.383
22	5.273	6.475	9.911
23	5.043	6.193	9.480
24	4.833	5.935	9.085

This scan is explicit for non-commercial use and is not intended for financial or material gain by anyone

Whe rdering Quote Description and Part Number from

Correct Column for Your Horse Power and Model.

NOT ✻ Indicates models for which Part is suitable.
Whe ✻ occurs in more than one column in same line Part is interchan le.

Illustration No.	DESCRIPTION OF PART.	Price. £ s. d.	PART NUMBER 9.96 h.p.	3.49 h.p.	4.98 h.p.	2.48 h.p.	MODELS M1 Twin	M2 Twin	M3 s.v.	M4 s.v.	M5 s.v.	M6 o.h.v.	M7 o.h.c.	M8 o.h.v.	M9 s.v.	M10 o.h.c.	M12 s.v.	For Dealer's Use
	Engine.																	
1	Front Cylinder Head, with Valve Guides ..	2 4 0	ZA1	..	..	..	✻	✻	..	..	..	..	..	..	..	..	..	..
	Rear Cylinder Head, with Valve Guides ..	2 4 0	ZA20	..	..	..	✻	✻	..	..	..	..	..	..	..	..	..	..
	Cylinder Head, with Valve Guides ..	2 1 6	..	H16-1	..	..	..	..	✻	✻	✻	..	..	..	..	..	..	O
	Cylinder Head. with Valve Guides ..	2 11 9	..	ZA60	..	..	..	..	..	..	..	✻	..	..	..	..	..	..
	Cylinder Head, with Valve Guides (Two Port) ..	2 14 3	..	ZA80	..	..	..	..	..	..	..	✻2P	..	..	..	..	..	..
	Cylinder Head, with Valve Guides ..	2 14 9	..	ZA100	..	..	..	..	..	..	..	..	✻	..	..	..	..	..
	Cylinder Head, with Valve Guides ..	2 11 9	..	..	ZA120	..	..	..	..	..	..	..	..	✻	..	..	..	..
	Cylinder Head, with Valve Guides (Two Port) ..	2 14 3	..	..	ZA140	..	..	..	..	..	..	..	..	✻2P	..	..	..	..
	Cylinder Head, with Valve Guides ..	2 6 0	..	..	G1-6	..	..	..	..	..	..	..	..	..	✻	..	..	O
	Cylinder Head, with Valve Guides ..	2 14 9	..	..	ZA180	..	..	..	..	..	..	..	..	..	..	✻	..	..
	Cylinder Head, with Valve Guides ..	1 17 3	..	..	..	F1	..	..	..	..	..	..	..	..	..	..	✻	O
2	Cylinder Barrel (Front or Rear) ..	1 14 0	ZA220	..	..	..	✻	✻	..	..	..	..	..	..	..	..	..	..
	Cylinder Barrel .. .. .. NOTE—This Barrel can be used for 1923 Models K3, 4, 5.	1 11 9	..	ZA240	..	..	..	..	✻	✻	✻	..	..	..	..	..	..	..
	Cylinder Barrel	1 12 9	..	ZA260	..	..	..	..	..	..	..	✻	..	..	..	..	..	..
	Cylinder Barrel (Two Port)	1 12 9	..	ZA280	..	..	..	..	..	..	..	✻2P	..	..	..	..	..	..
	Cylinder Barrel	1 12 9	..	H25-2	..	..	..	..	..	..	..	..	✻	..	..	..	..	O
	Cylinder Barrel	1 12 9	..	..	ZA320	..	..	..	..	..	..	..	..	✻	..	..	..	..
	Cylinder Barrel (Two Port)	1 12 9	..	..	ZA340	..	..	..	..	..	..	..	..	✻2P	..	..	..	..
	Cylinder Barrel	1 12 9	..	..	ZA360	..	..	..	..	..	..	..	..	..	✻	..	..	..
	Cylinder Barrel	1 12 9	..	..	G2-5	..	..	..	..	..	..	..	..	..	..	✻	..	O
	Cylinder Barrel	1 9 3	..	..	..	ZA400	..	..	..	..	..	..	..	..	..	..	✻	..
3	Cylinder Foot Washer	2	ZA420	..	..	..	✻	✻	..	..	..	..	..	..	..	..	..	..
	Cylinder Foot Washer	2	..	H26-1	..	..	..	..	✻	✻	✻	✻	✻	..	..	..	..	O
	Cylinder Foot Washer	2	..	..	G7-4	..	..	..	..	..	..	..	..	✻	✻	✻	..	O
	Cylinder Foot Washer	2	..	..	..	F6	..	..	..	..	..	..	..	..	..	..	✻	O
4	Cylinder Foot Studs .. .. .. ⅜ x 1⅜ x 26 and 20	7	K31	H27-3	G2-6	F4	✻	✻	✻	✻	✻	✻	..	✻	✻	..	✻	O
	Cylinder Foot Studs .. .. .. ⅜ x 1-11/16 x 26 and 20	7	..	ZA510	ZA510	..	..	..	..	..	..	..	✻	..	..	✻	..	..

This scan is explicit for non-commercial use and is not intended for financial or material gain by anyone

Wher dering Quote Description and Part Number from Correct Column for your Horse Power and Model.

Engine—Continued.

Illustration No.	DESCRIPTION OF PART.	Price. £ s. d.	PART NUMBER 9.96 h.p.	3.49 h.p.	4.98 h.p.	2.48 h.p.
N.I.	Cylinder Foot Stud Nuts ⅜ x 26 x ⅜ x 9/16	2	K32	H27-4	G2-7	F5
	Cylinder Head Washer	7	ZA540	..	G7-3	..
	Cylinder Head Washer	3	..	H27-1	..	..
	Cylinder Head Washer	3	..	ZA580	..	..
5	Cylinder Head Washer	7	..	H27-2A	..	..
	Cylinder Head Washer	7	..	..	ZA620	..
	Cylinder Head Washer	7	..	..	ZA640	..
	Cylinder Head Washer	3	..	..	..	F7
6	Cylinder Head Studs ⅜ x 2-7/16 x 20, both ends	7	..	H20-5	G1-10	..
N.I.	Cylinder Head Stud Nuts ⅜ x 20 x 1½ x 45/64	1 3	..	H20-6	G1-11	..
	Cylinder Head Pins, Plated ⅜ x 3⅝ x 20 ..	1 3	K36	H20-3	G1-9	F2
7	Cylinder Head Pins, Plated 7/16 x 3½ x 20 ..	1 3	..	ZA710	ZA710	..
	Connecting Rod, with Bushes	1 4 3	ZA720	..	..	..
	Connecting Rod, with Bushes	1 4 3	..	ZA740	..	..
	Connecting Rod, with Bushes	1 4 3	..	H32-1	..	..
	†Connecting Rod, with Bushes	1 4 3	..	..	G3-2	..
8	Connecting Rod, with Bushes	1 5 3	..	H32-2	..	..
	Connecting Rod, with Bushes	1 4 3	..	..	G3-3	..
	†Connecting Rod, with Bushes	1 5 3	..	..	ZA840	..
	Connecting Rod, with Bushes	1 1 3	..	..	..	F8
	Gudgeon Pin Bush (or Small End Bush) ..	2 0	ZA880	..	G12-1	..
9	Gudgeon Pin Bush (or Small End Bush) ..	1 9	..	H35-1	..	..
	Gudgeon Pin Bush (or Small End Bush) ..	1 9	..	..	..	F9
	Crank Pin Outer Race (or Big End Roller Race)	2 6	ZA940	..	..	..
10	Crank Pin Outer Race (or Big End Roller Race)	2 6	..	H38-1	G6-1	..
	Crank Pin Outer Race (or Big End Roller Race)	2 6	..	..	..	F10
	Crank Pin, complete with Race and Roller Bearings	1 0 9	ZA1000	..	..	..
11	Crank Pin, complete with Race and Roller	17 9	..	H41-1	ZA1020	..

NOTE Indicates models for which Part is suitable
When occurs in more than one column in same line Part is interchangea.

MODELS M1 Twin	M2 Twin	M3 s.v.	M4 s.v.	M5 s.v.	M6 o.h.v.	M7 o.h.c.	M8 o.h.v.	M9 s.v.	M10 o.h.c.	M12 s.v.	For Dealer's Use.
*	*	*	*	*	*	*	*	*	*	*	O
*	*	..	..	..	..	..	..	*	..	..	O
..	..	*	*	*	..	..	..	..	..	..	O
..	..	..	..	..	*	..	..	..	..	..	..
..	..	..	..	..	..	*	..	..	..	..	O
..	..	..	..	..	..	..	*	..	..	..	..
..	..	..	..	..	..	..	..	..	*	..	..
..	..	..	..	..	..	..	..	..	..	*	O
..	..	..	..	..	..	*	..	..	*	..	O
..	..	..	..	..	..	*	..	..	*	..	O
*	*	*	*	*	..	..	..	*	..	*	O
..	..	..	..	..	*	..	*	..	..	..	..
*	*	..	..	..	..	.	..	..	..	..	..
..	..	*	*	*	..	..	..	..	..	..	..
..	..	..	..	..	*	..	..	..	..	..	O
..	..	..	..	..	..	..	*	..	..	..	O
..	..	..	..	..	..	*	..	..	..	..	O
..	..	..	..	..	..	..	..	*	..	..	O
..	..	..	..	..	..	..	..	..	*	..	O
..	..	..	..	..	..	..	..	..	..	*	O
*	*	..	..	..	..	..	*	*	*	..	O
..	..	*	*	*	*	*	..	..	..	..	O
..	..	..	..	..	..	..	..	..	..	*	O
*	*	..	..	..	..	..	..	..	..	..	..
..	..	*	*	*	*	*	*	*	*	..	O
..	..	..	..	..	..	..	..	..	..	*	O
*	*	..	..	..	..	..	..	..	..	..	..
		*	*	*	*		*	*			O

This scan is explicit for non-commercial use and is not intended for financial or material gain by anyone

Whe. ordering Quote Description and Part Number from Correct Column for your Horse Power and Model.

NOTE When Indicates models for which Part is suitable. occurs in more than one column in same line part is interchangeal

Engine—Continued.

Illustration No.	DESCRIPTION OF PART.	Price. £ s. d.	PART NUMBER 9.96 h.p.	3.49 h.p.	4.98 h.p.	2.48 h.p.	MODELS M1 Twin	M2 Twin	M3 s.v.	M4 s.v.	M5 s.v.	M6 o.h.v.	M7 o.h.c.	M8 o.h.v.	M9 s.v.	M10 o.h.c.	M12 s.v.	For Dealer's Use.
	Crank Pin, complete with Race and Roller Bearings	17 9	..	ZA1040	..	..	..	..	..	..	..	..	*	..	..	..	..	..
	Crank Pin, complete with Race and Roller Bearings	17 9	..	..	ZA1060	..	..	..	..	..	..	..	..	..	..	*	..	..
	Crank Pin, complete with Race and Roller Bearings	13 6	..	..	..	F11	..	..	..	..	..	..	..	..	..	..	*	O
11	Crank Pin only, less Nuts	8 9	ZA1100	..	..	..	*	*	..	..	..	..	..	..	..	..	..	..
	Crank Pin only, less Nuts	7 0	..	H44-1	G4-1	..	..	..	*	*	*	*	..	*	*	..	..	O
	Crank Pin only, less Nuts	7 0	..	ZA1140	..	..	..	..	..	..	..	..	*	.	..	..	..	..
	Crank Pin only, less Nuts	7 0	..	..	ZA1160	..	..	..	..	..	..	..	..	..	..	*	..	..
	Crank Pin only, less Nuts	6 3	..	..	..	F12	..	..	..	..	..	..	..	..	..	..	*	O
	Crank Pin Thrust Washer	9	K55	H44-2	G5-1	..	*	*	*	*	*	*	..	*	*	..	..	O
	Crank Pin Thrust Washer	9	..	ZA1220	ZA1220	..	..	..	..	..	..	..	*	..	..	*	..	..
N I.	Crank Pin Thrust Washer	9	..	..	..	F15	..	..	..	..	..	..	..	..	..	..	*	O
	Crank Pin Nut, ⅝ x 20 x ¼ x 1	3	K54	H45	G5	F13	..	*	*	*	*	*	..	*	*	..	*	O
	Crank Pin Nut, ⅝ x 20 x ¼ x 1½	3	..	ZA1270	ZA1270	..	..	..	..	..	..	..	*	..	..	*	..	..
12	Crank Pin Roller (set of 70 for Twin, set of 35 for other models)	6 4 3 2	ZA1280	H48-1	G9-1	..	*	*	*	*	*	*	*	*	*	*	..	O
	Crank Pin Roller (set of 28)	2 9	..	..	..	F14	..	..	..	..	..	..	..	..	..	..	*	O
	Gudgeon Pin	3 6	ZA1320	..	G11	..	*	*	..	..	..	..	..	*	*	*	..	O
13	Gudgeon Pin	2 0	..	H52	..	..	..	..	*	*	*	*	*	..	..	..	..	O
	Gudgeon Pin	1 9	..	..	..	F16	..	..	..	..	..	..	..	..	..	..	*	O
	Gudgeon Pin Ring	3	ZA1380	..	G13	..	*	*	..	..	..	..	..	*	*	*	..	O
14	Gudgeon Pin Ring	3	..	H55	..	..	..	..	*	*	*	*	*	..	..	..	..	O
	Gudgeon Pin Ring	3	..	..	..	F17	..	..	..	..	..	..	..	..	..	..	*	O
	Piston, complete with Gudgeon Pin, Rings, etc. (Low Compression)	1 4 9	ZA1440	..	G14-6	..	*	*	..	..	..	..	..	..	*	..	..	O
	Piston, complete with Gudgeon Pin, Rings, etc. (Low Compression)	1 0 9	..	ZA1460	..	..	..	..	*	*	*	..	..	..	..	..	..	..
	Piston, complete with Gudgeon Pin, Rings, etc. (Low Compression)	1 1 0	..	H67-1	..	..	..	..	..	..	..	*	..	..	..	..	..	O
15	Piston, complete with Gudgeon Pin, Rings, etc. (Low Compression)	1 1 0	..	ZA1500	..	..	..	..	..	..	..	..	*	..	..	..	..	..
	Piston, complete with Gudgeon Pin, Rings, etc. (Low Compression)	1 4 9	..	..	G14-5	..	..	..	.	..	..	..	..	*	..	..	..	O
	Piston, complete with Gudgeon Pin, Rings, etc. (Low Compression)	1 4 9	..	..	ZA1540	..	..	..	..	..	..	..	..	..	..	*	..	..

This scan is explicit for non-commercial use and is not intended for financial or material gain by anyone

Wher dering Quote Description and Part Number from Correct Column for your Horse Power and Model.

Illustration No.	DESCRIPTION OF PART.	Price. £ s. d.	PART NUMBER 9.96 h.p.	3.49 h.p.	4.98 h.p.	3.49 h.p
	Engine—Continued.					
	Piston, complete with Gudgeon Pin, Rings, etc. (Low Compression)	17 9	..	..	..	F18
	Piston, complete with Gudgeon Pin, Rings, etc. (High Compression)	1 0 0	..	ZA1580	..	
	Piston, complete with Gudgeon Pin, Rings, etc. (High Compression)	1 0 0	..	ZA1600	..	..
	Piston, complete with Gudgeon Pin, Rings, etc. (High Compression)	1 4 9	..	..	ZA1620	..
	Piston, complete with Gudgeon Pin, Rings, etc. (High Compression)	1 3 9	..	..	ZA1640	..
	A Special High Compression Piston for M7 and M10 Models can be supplied for Sprint Races only. These Pistons are quite unsuitable for any other purpose.					
	Piston Body only (Low Compression) at A-1¼ in., at B-3⅞ in. ..	17 3	ZA1660	..	G15-6	..
	Piston Body only (Low Compression) at A-1 3/16 in., at B-2 31/32 in. ..	15 0	..	ZA1680	..	..
15	Piston Body only (Low Compression) at A-1 3/16 in., at B-2 61/64 in. ..	15 0	..	H81-1	..	..
	Piston Body only (Low Compression) at A-1 3/16 B-2 61/64 ..	17 3	..	ZA1720	..	..
	Piston Body only (Low Compression) at A-21/32 in., at B-3 5/64 in. ..	17 3	..	..	G15-5	..
	Piston Body only (Low Compression) at A-37/64 in., at B-3 5/64 in. ..	17 3	..	..	ZA1760	..
	Piston Body only (Low Compression) at A-1 1/32 in., at B-3 1/16 in. ..	12 0	..	..	..	F19
	Piston Body only (High Compression) at A-1 3/16 in., at B-3 7/32 in. ..	15 0	..	ZA1800	..	..
	Piston Body only (High Compression) at A-1 3/16 in., at B-3 9/64 in. ..	15 0	..	ZA1820	..	..
	Piston Body only (High Compression) at A-37/64 in., at B-3 17/64 in. ..	17 3	..	..	ZA1840	..
	Piston Body only (High Compression) at A-37/64 in., at B-3 11/32 in. ..	17 3	..	..	ZA1860	..
	A Special High Compression Piston for M7 and M10 models can be supplied for Sprint Races only. These Pistons are quite unsuitable for any other purpose					
	PISTON DIMENSIONS.—"A" is the distance from the bottom of the Gudgeon Pin Hole to the Skirt measured at right angles. "B" is the maximum overall height of the piston.					
	All 1929 Pistons are fitted with three rings at the top and one at the bottom.					
	Piston Rings .. .. .. each..	11	ZA1880	..	G16	..
16	Piston Rings .. .. .. each..	11	..	H85	..	..
	Piston Rings .. .. .. each..	11	..	..	..	F20
	Valve, complete with Springs, etc. ..	5 6	K85	H86	G17-1	..
17	Valve, complete with Springs, etc. ..	11 9	..	ZA1960	ZA1960	..
	Valve, complete with Springs, etc. ..	14 9	..	..	ZA1980	..

NOTE ✲ Indicates models for which Part is suitable.
When ✲ occurs in more than one column in same line Part is interchange:

MODELS M1 Twin	M2 Twin	M3 s.v.	M4 s.v.	M5. s.v	M6 o.h.v.	M7 o.h.c.	M8 o.h.v.	M9 s.v.	M10 o.h.c.	M12 s.v.	For Dealer's Use.
..	..	..	..	..	..	..	..	..	..	✲	O
..	..	..	..	..	✲	..	..	..	..	..	..
..	..	..	..	..	..	✲	..	..	..	..	..
..	..	..	..	..	..	..	✲	..	..	..	..
..	..	..	..	..	..	..	..	..	✲	..	..
✲	✲	..	..	..	..	..	..	✲	..	..	O
..	..	✲	✲	✲	..	..	..	..	..	..	..
..	..	..	..	..	✲	..	..	..	..	..	O
..	..	..	..	..	..	✲	..	..	..	..	..
..	..	..	..	..	..	..	✲	..	..	..	O
..	..	..	..	..	..	..	..	..	✲	..	..
..	..	..	..	..	..	..	..	..	..	✲	O
..	..	..	..	..	✲	..	..	..	..	..	..
..	..	..	..	..	..	✲	..	..	.	..	..
..	..	..	..	..	..	..	✲	..	..	..	..
..	..	..	..	..	..	..	..	..	✲	..	..
✲	✲	..	..	..	..	..	✲	✲	✲	..	O
..	..	✲	✲	✲	✲	✲	..	..	..	..	O
..	..	..	..	..	..	..	..	..	..	✲	O
✲	✲	✲	✲	✲	..	..	..	✲	..	..	O
..	..	..	..	..	✲	✲	✲	..	..	..	..
..	..	..	..	..	..	..	..	..	✲	..	..

This scan is explicit for non-commercial use and is not intended for financial or material gain by anyone

When ordering Quote Description and Part Number from Correct Column for your Horse Power and Model.

NOTE When * indicates models for which Part is suitable. occurs in more than one column in same line Part is interchange

Illustration No.	DESCRIPTION OF PART.	Price. £ s. d.	PART NUMBER 9.96 h.p.	3.49h.p.	4.98 h.p.	2.48 h.p.	MODELS M1 Twin	M2 Twin	M3 s.v.	M4 s.v.	M5 s.v.	M6 o.h.v.	M7 o.h.c.	M8 o.h.v	M9 s.v.	M10 o.h.c.	M12 s.v.	For Dealer's Use
	Engine—Continued.																	
	Valve, complete with Springs, etc.	5 6	..	..	..	F21	..	..	..	..	..	..	..	..	..	..	*	O
	Valve Stem (Inlet or Exhaust)	4 0	K86	H93	G18-1	..	*	*	*	*	*	..	..	..	*	..	..	O
17	Valve Stem (Inlet or Exhaust)	11 6	..	ZA2040	ZA2040	..	..	..	..	..	..	*	*	*	..	..	..	..
	Valve Stem (Inlet or Exhaust)	11 6	..	..	ZA2060	..	..	..	..	..	..	..	..	..	..	*	..	..
	Valve Stem (Inlet or Exhaust)	4 0	..	..	..	F22	..	..	..	..	..	..	..	..	..	..	*	O
	Valve Guide (Inlet or Exhaust)	1 6	K89	H100	G22-1	..	*	*	*	*	*	..	..	..	*	..	..	O
	Valve Guide (Inlet or Exhaust)	1 6	..	..	..	F23	..	..	..	..	..	..	..	..	..	..	*	O
	Valve Guide (Inlet)	2 3	..	H104-1	G22-1B	..	..	..	..	..	..	*	..	*	..	..	..	O
18	Valve Guide (Inlet or Exhaust)	2 3	..	ZA2160	..	..	..	..	..	..	..	..	*	..	..	..	..	
	Valve Guide (Inlet or Exhaust)	2 3	..	..	ZA2180	..	..	..	..	..	..	..	..	..	..	*	..	..
	Valve Guide (Exhaust)	2 3	..	ZA2200	ZA2200	..	..	..	..	..	..	*	..	*	..	..	..	..
19	Valve Spring	10	K90	H105	G19-1	F24	*	*	*	*	*	..	..	..	*	..	*	O
	Valve Spring Outer	10	..	H107	G20	..	..	..	..	..	..	*	*	*	..	*	..	O
20	Valve Spring Inner	7	..	H108	G21	..	..	..	..	..	..	*	*	*	..	*	..	O
	Valve Spring Cone	7	K91	H109	G24-1	F25	*	*	*	*	*	..	..	..	*	..	*	O
21	Valve Spring Cone	1 3	..	H111-1	G24-A	..	..	..	..	..	..	*	*	*	..	*	..	O
22	Valve Spring Cup	7	K92	H112	G23-1	F26	*	*	*	*	*	..	..	..	*	..	*	O
23	Valve Spring Dish	7	..	ZA2380	ZA2380	..	..	..	..	..	..	*	*	*	..	*	..	..
24	Valve Spring Cotter	2	K93	H115	G25-1	F27	*	*	*	*	*	.	..	..	*	.	*	O
25	Valve Split Collar	7	..	H117	G25	..	..	..	..	..	..	*	*	*	..	*	..	O
	Valve Spring Cover (Front)	3 9	ZA2385	..	..	..	*	*	..	..	..	..	..	..	..	..	..	.
	Valve Spring Cover (Rear)	3 9	ZA2390	..	..	..	*	*	..	..	..	..	..	..	..	..	..	..
	Valve Spring Cover	3 9	..	ZA2400	..	..	..	..	*	*	*	..	..	..	..	..	..	..
	Valve Spring Cover	3 9	..	..	ZA2410	..	..	..	..	..	..	..	..	..	*	..	..	..
N.I.	Valve Spring Cover	3 9	..	..	..	ZA2420	..	..	..	..	..	..	..	..	..	..	*	..
	Stud for Cover ¼ x 1 x 20	2	ZA2430	ZA2430	ZA2430	ZA2430	*	*	*	*	*	..	..	..	*	..	*	..
	Nut for Stud for Cover (Plated) ¼ x 20 x 3/16 x 7/16	1	ZA2440	ZA2440	ZA2440	ZA2440	*	*	*	*	*	..	..	..	*	..	*	..
	Pin for Valve Spring Cover (Plated) ¼ x ⅜ x 20 (Screw Head)	2	ZA2450	ZA2450	ZA2450	ZA2450	*	*	*	*	*	..	..	..	*	..	*	..
	Exhaust Valve Cap	2 3	K94	H118	G22-3	..	*	*	*	*	*	..	..	..	*	..	..	O
26	Exhaust Valve Cap	2 3	..	..	..	F28	..	..	..	..	..	..	..	..	..	..	*	O
	Inlet Valve Cap	2 3	K95	H119	G22-2	..	*	*	*	*	*	..	..	..	*	..	..	O
27	Inlet Valve Cap	2 3	..	..	..	F29	..	..	..	..	..	..	..	..	..	..	*	O

This scan is explicit for non-commercial use and is not intended for financial or material gain by anyone

When dering Quote Description and Part Number from Correct Column for your Horse Power and Model.

NOTE Indicates models for which Part is suitable.
When occurs in more than one column in same line Part is interchangeal

Illustration No.	DESCRIPTION OF PART.	Price. £ s. d.	PART NUMBER 9.96 h.p.	3.49 h.p.	4.98 h.p.	2.48 h.p.	MODELS M1 Twin	M2 Twin	M3 s.v.	M4 s.v.	M5 s.v.	M6 o.h.v.	M7 o.h.c.	M8 o.h.v.	M9 s.v.	M10 o.h.c.	M12 s.v.	For Dealer's Use.
	Engine—Continued.																	
28	Valve Cap Washer	2	K96	H120	G22-4	..	*	*	*	*	*	..	..	..	*	..	..	O
	Valve Cap Washer	2	..	..	..	F30	..	..	..	..	..	..	..	..	..	..	*	O
29	Exhaust Lifter Lever (R.H. Long) ..	1 0	K98	..	..	..	*	*	..	..	..	..	..	..	..	..	..	O
	Exhaust Lifter Lever (L.H. Long) ..	1 0	K100	..	..	..	*	*	..	..	..	..	..	..	..	..	..	O
30	Exhaust Lifter Lever (R.H. Short) ..	7	K103	..	..	..	*	*	..	..	..	..	..	..	..	..	..	O
	Exhaust Lifter Lever (L.H. Short) ..	7	K106	..	..	..	*	*	..	..	..	..	..	..	..	..	..	O
31	Exhaust Lifter Lever, 3½ or 4 long.. ..	1 3	..	ZA2640	ZA2640	ZA2640	..	..	*	*	*	*	..	*	*	..	*	..
	NOTE—State length when ordering. Exhaust Lifter Lever	2 9	..	H123-1	G26-1	..	..	..	..	..	..	..	*	..	..	*	..	O
32	Spindle for Exhaust Lifter Lever	7	K108	..	..	..	*	*	..	..	..	..	..	..	..	..	..	O
33	Spindle for Exhaust Lifter Lever	3 3	..	ZA2700	ZA2700	ZA2700	..	..	*	*	*	*	..	*	*	..	*	..
	Nut for Exhaust Lifter Lever Spindle .. ¼ x 20 x 3/16 x 7/16	1	K110	H133	G27-1	F34	*	*	*	*	*	*	..	*	*	..	*	O
N.I.	Washer for Exhaust Lifter Lever, ¼ Plain	1	K111	H134	G27-2	F35	*	*	*	*	*	*	..	*	*	..	*	O
	Pin for Exhaust Lifter Lever, 3/16 x 7/16 x 32	4	..	H123-2	G26-2	..	..	..	..	..	..	..	*	..	..	*	..	O
	Return Spring for Exhaust Lifter Lever ..	3	K113	..	..	..	*	*	..	..	..	..	..	..	..	..	..	O
	Return Spring for Exhaust Lifter Lever ..	3	..	H129	G101	F32	..	..	*	*	*	*	..	*	*	..	*	O
	Bush for Exhaust Lifter Spindle	10	K112	..	..	..	*	*	..	..	..	..	..	..	..	..	..	O
	Pin for Exhaust Lifter Cable, ¼ x ⅜ x 26 (Plated)	6	..	ZA2780	ZA2780	ZA2780	..	..	*	*	*	*	..	*	*	..	*	..
	Nut for Pin, ¼ x 26 x ½ x 7/16 (Plated) ..	2	..	YA4380	YA4380	YA4380	..	..	*	*	*	*	..	*	*	..	*	..
	Washer for Pin, ¼ Single Spring	1	..	MA500	MA500	MA500	..	..	*	*	*	*	..	*	*	..	*	..
35	Exhaust Valve Tappet Rod (Front or Rear Cylinder)	4 0	K116	..	..	..	*	*	..	..	..	..	..	..	..	..	..	O
	Exhaust Valve Tappet Rod	4 6	..	H137-1	..	..	..	..	*	*	*	..	..	..	..	..	..	O
	Exhaust Valve Tappet Rod	4 6	..	ZA2850	ZA2850	..	..	..	..	..	..	*	..	*	..	..	..	..
	Exhaust Valve Tappet Rod	4 0	..	..	G29-5	..	..	..	..	..	..	..	..	..	*	..	..	O
	Exhaust Valve Tappet Rod	4 6	..	..	..	F36	..	..	..	..	..	..	..	..	..	..	*	O
N.I.	Exhaust Valve Tappet Rod Locknut .. 5/16 x 26 x 9/32 x 1	7	K117	..	..	..	*	*	..	..	..	..	..	..	..	..	..	O
	Exhaust Valve Tappet Rod Locknut .. 5/16 x 26 x 3/16 x 17/32	2	..	H144	G32	F37	..	..	*	*	*	..	..	..	*	..	*	O
35	Inlet Valve Tappet Rod (Front) ..	3 3	K123	..	..	..	*	*	..	..	..	..	..	..	..	..	..	O

This scan is explicit for non-commercial use and is not intended for financial or material gain by anyone

Wl Ordering Quote Description and Part Number from Correct Column for your Horse Power and Model.

Engine—Continued.

Illustration No.	DESCRIPTION OF PART.	Price. £ s. d.	PART NUMBER 9.96 h.p.	3.49 h.p.	4.98 h.p.	2.48.h.p
	Inlet Valve Tappet Rod (Rear)	3 6	K120	..	..	..
	Inlet Valve Tappet Rod (same as K120) ..	3 6	..	H141-1	..	..
35	Inlet Valve Tappet Rod	3 6	..	ZA3110	ZA3110	..
	Inlet Valve Tappet Rod	4 0	..	..	G28-5	..
	Inlet Valve Tappet Rod	3 6	..	..	..	F38
N.I.	Inlet Valve Tappet Rod Locknut .. .. 5/16 x 26 x 3/16 x 17/32	2	K124	H144	G32	F37
	Tappet Top (Inlet)	10	ZA3190	..	..	..
	Tappet Top (Exhaust)	10	ZA3210	..	..	..
36	Tappet Top (Inlet or Exhaust)	10	..	H145-1	..	F39
	Tappet Top (Inlet or Exhaust)	11	..	..	G31-2	..
	Tappet Stud in Crankcase	3	K129	..	..	..
37	Tappet Stud in Crankcase	3	..	H149	G30	F40
	Tappet Guide (Exhaust) (Front or Rear) ..	3 6	ZA3310	..	..	..
	Tappet Guide (Exhaust)	2 9	..	ZA3330	ZA3330	..
	Tappet Guide (Exhaust)	3 6	..	..	ZA3350	..
	Tappet Guide (Exhaust)	2 9	..	..	..	ZA3370
38	Tappet Guide (Inlet) Front	3 3	ZA3390	..	..	..
	Tappet Guide (Inlet) Rear	2 9	ZA3410	..	..	..
	Tappet Guide (Inlet)	3 3	..	ZA3430	ZA3430	..
	Tappet Guide (Inlet)	3 6	..	..	ZA3450	.
	Tappet Guide (Inlet)	2 9	..	..	..	ZA3470
	Tappet Guide Nut (Exhaust) (Front or Rear)	1 9	ZA3490	..	..	..
	Tappet Guide Nut (Inlet) (Front or Rear) ..	1 3	ZA3510	..	..	..
	Tappet Guide Nut (Inlet and Exhaust) ..	1 3	..	ZA3530	..	..
39	Tappet Guide Nut (Inlet and Exhaust) ..	1 3	..	ZA3550	ZA3550	..
	Tappet Guide Nut (Inlet and Exhaust) ..	1 9	..	..	ZA3570	..
	Tappet Guide Nut (Inlet and Exhaust ..	1 3	..	..	..	ZA3590

NOTE When * Indicates models for which Part is suitable. occurs in more than one column in same line Part is interchange:

MODELS M1 Twin	M2 Twin	M3 s.v.	M4 s.v.	M5 s.v.	M6 o.h.v	M7 o.h.c.	M8 o.h.v.	M9 s.v.	M10 o.h.c.	M12 s.v.	For Dealer's Use.
*	*	..	..	..	..	.	..	..	..	..	O
..	..	*	*	*	..	..	..	..	..	..	O
..	..	..	..	..	*	..	*	..	..	..	..
..	..	..	..	..	..	..	..	*	..	..	O
..	..	..	..	..	..	..	..	..	..	*	O
*	*	*	*	*	..	..	..	*	..	*	O
*	*	..	..	..	..	..	..	..	..	..	..
*	*	..	..	..	..	..	..	..	..	..	..
..	..	*	*	*	..	..	..	..	..	*	O
..	..	..	..	..	..	..	..	*	..	..	O
*	*	..	..	..	..	..	..	..	..	..	O
..	..	*	*	*	*	..	*	*	..	*	O
*	*	..	..	..	..	..	..	..	..	..	..
..	..	*	*	*	*	..	*	..	..	..	..
..	..	..	..	..	..	..	..	*	..	..	.
..	..	..	..	..	..	..	..	..	..	*	..
*	*	..	..	..	..	..	..	..	..	..	..
*	*	..	..	..	..	..	..	..	..	..	..
..	..	*	*	*	*	..	*	..	..	..	..
..	..	..	..	..	..	..	..	*	..	..	..
..	..	..	..	..	..	..	..	..	..	*	..
*	*	..	..	..	..	..	..	..	..	..	..
*	*	..	..	..	..	..	.	..	..	..	..
..	..	*	*	*	..	..	..	..	..	..	..
..	..	..	..	..	*	..	*	..	.	..	..
..	..	..	..	..	..	..	..	*	..	..	..
..	..	..	..	..	..	..	..	..	..	*	..

This scan is explicit for non-commercial use and is not intended for financial or material gain by anyone

W. . Ordering Quote Description and Part Number from Correct Column for your Horse Power and Model.

NOT ✱ Indicates models for which Part is suitable.
Whe ✲ occurs in more than one column in same line Part is interchan e.

Illustration No.	DESCRIPTION OF PART.	Price. £ s. d.	PART NUMBER 9.96 h.p.	3.49 h.p.	4.98 h.p.	2.48 h.p.	MODELS M1 Twin	M2 Twin	M3 s.v.	M4 s.v.	M5 s.v.	M6 o.h.v.	M7 o.h.c.	M8 o.h.v.	M9 s.v.	M10 o.h.c.	M12 s.v.	For Dealer's Use
	Engine—Continued.																	
N.I.	Cork Washer for Tappet Guide	2	ZA3610	ZA3610	ZA3610	ZA3610	✱	✱	✱	✲	✲	✱	..	✱	✲	..	✲	..
	Mainshaft (Timing Side)	8 9	K146	H196-1	G35-3	F44	✲	✲	✲	✲	✲	✱	..	✱	✱	..	✲	O
	Mainshaft (Timing Side)	8 9	..	H196-2	G35-4	..	..	..	..	..	..	..	✲	..	..	✱	..	O
	Mainshaft (Driving Side)	11 0	ZA3660	..	ZA3660	ZA3660	✲	✲	..	..	..	..	..	✲	✲	..	✲	..
40	Mainshaft (Driving Side)	11 0	..	ZA3680	..	..	..	..	✱	✱	✱	✱	..	..	..	..	..	..
	Mainshaft (Driving Side)	11 0	..	ZA3700	..	..	..	..	..	..	..	..	✲	..	..	..	..	..
	Mainshaft (Driving Side)	11 0	..	..	G38-3A	..	..	..	..	..	..	..	..	..	..	✱	..	O
	Mainshaft Locknut, ⅝ x 20 x ¼ x 1	3	K54	H45	G5	F13	✲	✱	✲	✲	✲	✲	✱	✲	✲	✲	✲	O
N.I.	Woodruffe Key, No. 6 (large, two used) ..	2	K151	H201	ZA3750	F46	✲	✱	✲	✲	✲	✲	✱	✲	✲	✲	✲	O
	Woodruffe Key, No. 3 (small, two used) ..	2	K152	H202	G52-1	F47	✱	✲	✱	✲	✲	✱	✱	✲	✲	✱	✲	O
	Mainshaft Bush (Timing Side)	5 3	ZA3770	ZA3770	ZA3770	ZA3770	✲	✱	✱	✲	✲	✲	..	✲	✲	..	✲	..
41	Mainshaft Bush (Driving Side)	7 6	K162	..	G40-2A	F49	✲	✲	..	..	..	..	..	✲	✲	..	✲	O
	Mainshaft Bush (Driving Side)	7 6	..	ZA3810	..	..	..	..	✲	✲	✱	✲	..	..	..	..	..	..
	Mainshaft Ball Race (Timing Side) 2 x ⅜ x 11/16 in. ..	11 6	..	H207-2	G37-4	..	..	..	..	..	..	..	✲	..	..	✱	..	O
	Mainshaft Ball Race (Driving Side) 2 x ⅜ x 9/16 in. ..	10 0	..	H212-2	G40-2B	..	..	..	..	..	..	..	✲	..	..	✲	..	O
N.I.	Mainshaft Distance Piece (Timing Side) ..	10	..	H216-1	G40-4A	..	..	..	..	..	..	..	✲	..	..	✲	..	O
	Mainshaft Distance Piece (Driving Side) ..	4 0	..	H217-1	..	..	..	..	..	..	..	..	✱	..	..	..	..	O
	Mainshaft Distance Piece (Driving Side) ..	7 6	..	..	G40-6A	..	..	..	..	..	..	..	..	..	..	✲	..	O
	Crankcase Half, with Bushes (Timing Side) .	1 14 6	ZA3920	..	..	..	✱	✱	..	..	..	..	..	..	..	..	..	..
	Crankcase Half, with Bushes (Timing Side)..	1 8 9	..	ZA3940	..	..	..	..	✲	✱	✲	✱	..	..	..	..	..	..
	Crankcase Half, with Races (Timing Side) ..	2 5 6		ZA3960			..	..	..	..	..	..	✲	..	..	..	..	O
	Crankcase Half, with Bushes (Timing Side)..	1 13 0	..	..	ZA3980	..	..	..	..	..	..	..	..	✱	✱	..	..	..
42	Crankcase Half, with Races (Timing Side) ..	2 3 3	..	..	ZA4000	..	..	..	..	..	..	..	..	..	..	✲	..	O
	Crankcase Half, with Bushes (Timing Side)..	1 5 9	..	..	..	ZA4020	..	..	..	..	..	..	..	..	..	..	✱	..
	Crankcase Half, with Bushes (Driving Side)..	1 14 6	ZA4040	..	..	..	✱	✱	..	..	..	..	..	..	..	..	..	..
	Crankcase Half, with Bushes (Driving Side) ..	1 8 9	..	ZA4060	..	..	..	..	✱	✲	✲	✲	..	..	..	..	..	..
	Crankcase Half, with Races (Driving Side) ..	2 18 6	..	ZA4080	..	..	..	..	..	..	..	..	✱	..	..	..	..	..

This scan is explicit for non-commercial use and is not intended for financial or material gain by anyone

W. Ordering Quote Description and Part Number from Correct Column for your Horse Power and Model.

NOTE When ✲ Indicates models for which Part is suitable. occurs in more than one column in same line Part is interchange.

Illustration No.	DESCRIPTION OF PART.	Price. £ s. d.	PART NUMBER 9.96 h.p.	3.49 h.p.	4.98 h.p.	2.48 h.p.	MODELS M1 Twin	M2 Twin	M3 s.v	M4 s.v.	M5 s.v.	M6 o.h.v.	M7 o.h.c.	M8 o.h.v.	M9 s.v.	M10 o.h.c.	M12 s.v.	For Dealer's Use.
	Engine—Continued.																	
	Crankcase Half, with Bushes (Driving Side)..	1 13 0	..	..	ZA4100	..	..	..	..	..	..	..	..	✲	✲	..	..	..
42	Crankcase Half, with Races (Driving Side) ..	2 3 3	..	..	ZA4120	..	..	..	..	..	..	..	..	..	..	✲	..	.
	Crankcase Half, with Bushes (Driving Side)..	1 5 9	..	..	..	ZA4140	..	..	..	..	..	..	..	..	..	..	✲	..
	† NOTE—Crankcase Halves are not supplied separately.																	
	Paper Washer for Crankcase	3	ZA4160	..	..	..	✲	✲	..	..	..	..	..	..	..	..	..	..
	Paper Washer for Crankcase	3	..	ZA4170	..	..	..	..	✲	✲	✲	✲	✲	..	..	..	..	..
N.I.	Paper Washer for Crankcase	3	..	..	ZA4180	..	..	..	..	..	..	..	..	✲	✲	..	..	..
	Paper Washer for Crankcase	3	..	..	ZA4190	..	..	..	..	..	..	..	..	..	..	✲	..	..
	Paper Washer for Crankcase	3	..	..	..	ZA4200	..	..	.	..	..	..	..	..	..	..	✲	..
	Timing Cover only, with Bushes	1 0 6	ZA4210	..	..	..	✲	✲	..	..	..	..	..	..	..	..	..	..
43	Timing Cover only, with Bushes	8 0	..	ZA4230	ZA4230	..	..	..	✲	✲	✲	✲	..	✲	✲	..	..	..
	Timing Cover only, with Bushes	7 0	..	..	..	ZA4250	..	..	..	..	..	..	..	..	..	..	✲	..
	† NOTE—Not supplied separately from Crankcase.																	
	Paper Washer for Timing Cover	3	ZA4270	..	..	..	✲	✲	..	..	..	..	..	..	..	..	..	..
	Paper Washer for Timing Cover	3	..	ZA4280	ZA4280		..	..	✲	✲	✲	✲	..	✲	✲	..	..	..
	Paper Washer for Timing Cover	3	..	..	..	ZA4290	..	..	..	..	..	..	..	..	..	..	✲	..
	O.H.C. Chain Cover	17 3	..	H249-2	..	..	..	..	..	..	..	..	✲	..	..	..	..	O
	O.H.C. Chain Cover	17 3	..	..	G71-5	..	..	..	..	..	..	..	..	..	..	✲	..	O
	O.H.C. Chain Cover Fabric	1 9	..	H249-3	..	..	..	..	..	..	..	..	✲	..	..	..	..	O
	O.H.C. Chain Cover Fabric	1 9	..	..	G71-6	..	..	..	..	..	..	..	..	..	..	✲	..	O
	Rivets for Fabric .. .. doz...	4	..	H249-4	G71-7	..	..	..	..	..	..	..	✲	..	..	✲	..	O
N.I.	O.H.C. Chain Cover Cap	14 3	..	H249-5	..	..	..	..	..	..	..	..	✲	..	..	..	..	O
	O.H.C. Chain Cover Cap .. .	14 3	..	..	G71-8	..	..	..	..	..	..	..	..	..	..	✲	..	O
	Pins for Chain Cover (Long) .. each.. 5/16 x 1-9/16 x 20 Round Head	6	..	H249-6	G71-9		..	..	..	..	..	..	✲	..	..	✲	..	O
	Pins for Chain Cover (Short) .. each.. 5/16 x 1-3/16 x 20 Round Head	3	..	H249-7	G71-10	..	..	..	..	..	..	..	✲	..	..	✲	..	O
	Timing Cover Pins (Long) .. .. "O" B.A. x 1-3/16 Hex. Head	3	ZA4450	ZA4450	ZA4450	..	✲	✲	✲	✲	✲	✲	..	✲	✲	..	..	..
	Timing Cover Pins (Short) .. .. "O" B.A. x 11/16 Hex. Head	2	ZA4460	ZA4460	ZA4460	ZA4460	✲	✲	✲	✲	✲	✲	..	✲	✲	..	✲	..
	Timing Cover Pins (Cheese Head).. .. "O" B.A. x ⅜ Round Head	2	ZA4470	ZA4470	ZA4470	ZA4470	✲	✲	✲	✲	✲	✲	..	✲	✲	..	✲	..
	Magneto Chain Cover Pin (Long).. .. "O" B.A. x 2 Hex. Head	3	ZA4480	ZA4480	ZA4480	ZA4480	✲	✲	✲	✲	✲	✲	..	✲	✲	..	✲	..

This scan is explicit for non-commercial use and is not intended for financial or material gain by anyone

W Ordering Quote Description and Part Number from Correct Column for Your Horse Power and Model.

N E ✱ Indicates models for which Part is suitable.
W ✱ occurs in more than one column in same line Part is interch eable.

Illustration No.	DESCRIPTION OF PART.	Price. £ s. d.	PART NUMBER 9.96 h.p.	3.49 h.p.	4.98 h.p.	2.48 h.p.	MODELS M1 Twin	M2 Twin	M3 s.v.	M4 s.v.	M5 s.v.	M6 o.h.v.	M7 o.h.c.	M8 o.h.v.	M9 s.v.	M10 o.h.c.	M12 s.v.	For Dealer's Use
	Engine—Continued.																	
44	Magneto Chain Cover, complete with Pump Unit	1 10 0	ZA4490	..	..	..	✱	✱	..	..	..	..	..	..	..	..	..	.. †
	Magneto Chain Cover, complete with Pump Unit	1 10 0	..	ZA4510	ZA4510	..	..	..	✱	✱	✱	✱	..	✱	✱	..	..	.. †
	Magneto Chain Cover, complete with Pump Unit	1 10 0	..	..	..	ZA4530	..	..	..	..	..	..	..	..	..	..	✱	.. †
	Magneto Chain Cover less Pump Parts ..	14 6	ZA4550	..	..	..	✱	✱	..	..	..	..	..	..	..	..	..	.. †
	Magneto Chain Cover less Pump Parts	14 6	..	ZA4570	ZA4570	..	..	..	✱	✱	✱	✱	..	✱	✱	..	..	.. †
	Magneto Chain Cover less Pump Parts ..	14 6	..	..	..	ZA4590	..	..	..	..	..	..	..	..	..	..	✱	.. †
	Pump Sealing Washer (Cork)	1	ZA4610	ZA4610	ZA4610	ZA4610	✱	✱	✱	✱	✱	✱	..	✱	✱	..	✱	.. †
	Oil Feed Tube	3	ZA4620	ZA4620	ZA4620	ZA4620	✱	✱	✱	✱	✱	✱	..	✱	✱	..	✱	.. †
	Oil Sump Connection, complete with Filter ..	2 3	ZA4630	ZA4630	ZA4630	ZA4630	✱	✱	✱	✱	✱	✱	✱	✱	✱	✱	✱	..
	Oil Sump Connection only	10	ZA4640	ZA4640	ZA4640	ZA4640	✱	✱	✱	✱	✱	✱	✱	✱	✱	✱	✱	..
	Oil Feed Washer	3	ZA4650	ZA4650	ZA4650	ZA4650	✱	✱	✱	✱	✱	✱	..	✱	✱	..	✱	.. †
	Pump Plunger..	6 0	ZA4660	ZA4660	ZA4660	ZA4660	✱	✱	✱	✱	✱	✱	..	✱	✱	..	✱	.. †
	Pump Plunger..	6 0	..	ZA4665	ZA4665	..	..	..	..	..	..	..	✱	..	..	✱	..	O †
	Driving Worms	2 3	ZA4670	ZA4670	ZA4670	ZA4670	✱	✱	✱	✱	✱	✱	✱	✱	✱	✱	✱	.. †
	Driving Spindle Bush	1 0	ZA4680	ZA4680	ZA4680	ZA4680	✱	✱	✱	✱	✱	✱	✱	✱	✱	✱	✱	.. †
	End Plug	1 0	ZA4690	ZA4690	ZA4690	ZA4690	✱	✱	✱	✱	✱	✱	✱	✱	✱	✱	✱	. †
N.I.	Washer for End Plug	2	ZA4700	ZA4700	ZA4700	ZA4700	✱	✱	✱	✱	✱	✱	✱	✱	✱	✱	✱	.. †
	Short Unions	6	ZA4710	ZA4710	ZA4710	ZA4710	✱	✱	✱	✱	✱	✱	✱	✱	✱	✱	✱	.. †
	Long Unions	8	ZA4720	ZA4720	ZA4720	ZA4720	✱	✱	✱	✱	✱	✱	✱	✱	✱	✱	✱	.. †
	Brass Liner	1 0	ZA4730	ZA4730	ZA4730	ZA4730	✱	✱	✱	✱	✱	✱	✱	✱	✱	✱	✱	.. †
	Liner Lock Screws .. .. .. 4 B.A. x ⅛ Cheese Head	1	ZA4740	ZA4740	ZA4740	ZA4740	✱	✱	✱	✱	✱	✱	✱	✱	✱	✱	✱	.. †
	Small Plug Screws .. .. .. 2 B.A. x ¼ Cheese Head	1	ZA4750	ZA4750	ZA4750	ZA4750	✱	✱	✱	✱	✱	✱	✱	✱	✱	✱	✱	.. †
	Bush Screws .. .. 4 B.A. x ¼ Cheese Head	1	ZA4760	ZA4760	ZA4760	ZA4760	✱	✱	✱	✱	✱	✱	✱	✱	✱	✱	✱	.. †
	Cam Screws	3	ZA4770	ZA4770	ZA4770	ZA4770	✱	✱	✱	✱	✱	✱	✱	✱	✱	✱	✱	.. †
	Bush for Front Exhaust Camshaft in Timing Cover	1 6	K205	H264-1	G48-1	F62	✱	✱	✱	✱	✱	✱	..	✱	✱	..	✱	O
	Bush for Front Exhaust Camshaft in Crankcase	1 6	K214	H266-1	G47-1	F64	✱	✱	✱	✱	✱	✱	..	✱	✱	..	✱	O
	Bush for Rear Exhaust Camshaft in Timing Cover	1 6	K214	..	..	..	✱	✱	..	..	..	..	..	..	..	..	..	O

This scan is explicit for non-commercial use and is not intended for financial or material gain by anyone

Wh Ordering Quote Description and Part Number from Correct Column for your Horse Power and Model.

NOT ✲ Indicates models for which Part is suitable.
Whe. ✲ occurs in more than one column in same line Part is interchange

Illustration No.	DESCRIPTION OF PART.	Price. £ s. d.	PART NUMBER 9.96 h.p.	3.49 h.p.	4.98 h.p.	2.48 h.p.	MODELS M1 Twin	M2 Twin	M3 s.v.	M4 s.v.	M5 s.v.	M6 o.h.v.	M7 o.h.c.	M8 o.h.v.	M9 s.v.	M10 o.h.c.	M12 s.v.	For Dealer's Use
	Engine—Continued.																	
	Bush for Rear Exhaust Camshaft in Crankcase	1 6	K214	..	..	..	✲	✲	..	..	..	..	..	..	..	..	..	O
	Bush for Double Inlet Camshaft in Timing Cover	1 6	K208	.	..	..	✲	✲	..	..	..	..	..	..	..	..	..	O
N.I.	Bush for Double Inlet Camshaft in Crankcase	1 3	K217	..	..	..	✲	✲	..	..	..	..	..	..	..	..	..	O
	Bush for Inlet Camshaft in Timing Cover ..	1 6	..	H264-1	G48-1	F62	..	..	✲	✲	✲	✲	..	✲	✲	..	✲	O
	Bush for Inlet Camshaft in Crankcase ..	1 6	..	H265-1	G47-1	F64	..	..	✲	✲	✲	✲	..	✲	✲	..	✲	O
	Small Timing Pinion	4 0	K227	..	..	..	✲	✲	..	..	..	..	..	..	..	..	..	O
45	Small Timing Pinion	4 0	..	H268-1	G43-1	F65	..	..	✲	✲	✲	✲	..	✲	✲	..	✲	O
	Small Timing Pinion	3 9	..	H268-2	G43-2	..	..	..	..	..	..	..	✲	..	..	✲	..	O
N.I.	Small Timing Pinion Locknut .. .. 9/16 x 20 x 3/16 x 13/16	3	K228	H269	G44	F65	✲	✲	✲	✲	✲	✲	..	✲	✲	..	✲	O
46	Toggle	4 6	K222	..	..	..	✲	✲	..	..	..	..	..	..	..	..	..	O
N.I	Spindle for Toggle	1 6	K224	..	..	..	✲	✲		..	..	..	..	..	..	..	..	O
	Toggle Spindle Nut .. .. .. 1/4 x 24 x 7/32 x 7/16	1	K225	..	..	..	✲	✲	..	..	..	..	..	..	..	..	..	O
	Rear Exhaust Camwheel	8 9	ZA5100	..	..	..	✲	✲	..	..	..	..	..	..	..	..	..	..
	Front Exhaust Camwheel	8 9	ZA5120	..	..	..	✲	✲	..	..	..	..	..	..	..	..	..	..
	Double Inlet Camwheel	11 6	ZA5140	..	..	..	✲	✲	..	..	..	..	..	..	..	..	..	..
47	Exhaust Camwheel	8 9	..	ZA5160	ZA5160	..	..	..	✲	✲	✲	✲	..	✲	✲	..	..	..
	Exhaust Camwheel	8 9	..	..	..	ZA5180	..	..	..	..	..	..	..	..	..	..	✲	..
	Inlet Camwheel	8 9	..	ZA5200	ZA5200	..	..	..	✲	✲	✲	✲	..	✲	✲	..	..	..
	Inlet Camwheel	8 9	..	..	..	ZA5220	..	..	..	..	..	..	..	..	..	..	✲	..
	Rear Exhaust Camshaft..	2 3	ZA5240	..	..	..	✲	✲	..	..	..	..	..	..	..	..	..	..
	Front Exhaust Camshaft	3 6	K240	..	..	..	✲	✲	..	..	..	..	..	..	..	..	..	O
48	Double Inlet Camshaft	2 0	K247	..	..	..	✲	✲	..	..	..	..	..	..	..	..	..	O
	Exhaust Camshaft (same as K240) ..	3 6	..	H278-1	G46-2	F68	..	..	✲	✲	✲	✲	..	✲	✲	..	✲	O
	Inlet Camshaft	2 3	..	ZA5240	ZA5240	ZA5240	..	..	✲	✲	✲	✲	..	✲	✲	..	✲	..
N.I.	Woodruffe Key, No. 3, Small (two used) ..	2	K152	H202	G52-1	F47	✲	✲	✲	✲	✲	✲	..	✲	✲	..	✲	O

This scan is explicit for non-commercial use and is not intended for financial or material gain by anyone

When ordering Quote Description and Part Number from Correct Column for your Horse Power and Model.

NOTE * Indicates model for which Part is suitable.
When * occurs in more than one column in same line Part is interchangeable.

Illustration No.	DESCRIPTION OF PART.	Price £ s. d.	PART NUMBER 9.96 h.p.	3.49 h.p.	4.98 h.p.	2.48 h.p.	MODELS M1 Twin	M2 Twin	M3 s.v.	M4 s.v.	M5 s.v.	M6 o.h.v.	M7 o.h.c.	M8 o.h.v.	M9 s.v.	M10 o.h.c.	M12 s.v.	For Dealer's Use.
	Engine —Continued.																	
49	O.H.C. Camshaft	1 8 9	..	H288-2	G50-2	..	..	..	..	..	..	..	*	..	..	*	..	O
50	Sprocket for O.H.C. Camshaft	4 6	..	H288-3	G50-3	..	..	..	..	..	..	..	*	..	..	*	..	O
51	Sleeve for O.H.C. Camshaft Sprocket ..	2 9	..	H288-4	G50-4	..	..	..	..	..	..	..	*	..	..	*	..	O
52	Peg Washer for O.H.C Camshaft Sleeve ..	1 6	..	H288-5	G50-5	..	..	..	..	..	..	..	*	..	..	*	..	O
53	Nut for O.H.C. Camshaft, ½ x 20 x ⅜ x 45/64 .. (Castellated)	1 3	..	H288-7	G50-7	..	..	..	..	..	..	..	*	..	..	*	..	O
N.I.	Bearings for O.H.C. Camshaft, 1-9/16 x ⅜ x 7/16	8 9	..	H288-8	G50-8	..	..	..	..	..	..	..	*	..	..	*	..	O
54	Sprocket for O.H.C. Timing Gear.. ..	12 0	..	H288-9	G50-9	..	..	..	..	..	..	..	*	..	..	*	..	O
55	O.H.C. Timing Wheel	9 9	..	H288-10	G50-10	..	..	..	..	..	..	..	*	..	..	*	..	O
56	O.H.C. Timing Gear Shaft	2 9	..	H288-11	G50-11	..	..	..	..	..	..	..	*	..	..	*	..	O
	Ball Races for Timing Gear Shaft.. each.. 1-5/16 x ½ x ⅜	8 0	..	H288-12	G50-12	..	..	..	..	..	..	..	*	..	..	*	..	O
	O.H.C. Tensioner Blade	1 3	..	H288-13	..	..	..	..	..	..	..	..	*	..	..	..	..	O
	O.H.C. Tensioner Blade	1 3	..	..	G50-13	..	..	..	..	..	..	..	..	..	..	*	..	O
	Coil Spring for O.H C. Tensioner	1 3	..	H288-13A	..	..	..	..	..	..	..	.	*	..	..	..	..	O
	Coil Spring for O.H.C. Tensioner	1 3	..	..	G50-13A	..		..	..	..	..	..	..	..	..	*	..	O
N.I.	Top Pin for O.H.C. Tensioner	4	..	ZA5280	ZA5280	..	..	..	..	..	..	..	*	..	..	*	..	..
	Bottom Pin for O.H.C. Tensioner.. ..	1 3	..	H288-15	G50-15	..	..	..	..	..	..	..	*	..	..	*	..	O
	O.H.C. Slider..	9	..	H288-16	G50-16	..	..	..	..	..	..	..	*	..	..	*	..	O
	Spring for O.H.C. Slider	4	..	H288-17	G50-17	..	..	..	..	..	..	..	*	..	..	*	..	O
	Pin for O.H.C. Slider Spring (one slot) .. 2 B.A. x ⅜ Cheese Head	3	..	H288-18	G50-18	..	..	..	..	..	..	..	*	..	..	*	..	O
	Pin for O.H.C. Slider Spring (two slots) .. 2 B.A. x ⅜ Cheese Head	3	..	H288-19	G50-19	..	..	..	..	..	..	..	*	..	..	*	..	O
57	Magneto Engine Sprocket	3 6	K249	H289	G51	F71	*	*	*	*	*	*	..	*	*	..	*	O
N.I.	Locknut for Magneto Engine Sprocket .. ⅜ x 26 x ¼ x ⅜	3	K250	H290	G52	F72	*	*	*	*	*	*	..	*	*	..	*	O
58	Induction Pipe	7 0	K253	..	..	..	*	*	..	..	..	..	..	..	..	..	..	O
59	Nut for Induction Pipe (Plated) .. .. 1⅜ x 24 x 13/32 x 1½	1 3	K254	..	..	..	*	*	..	..	..	..	..	..	..	..	..	O
60	Flanged Inlet Connection	1 6	K255	..	..	..	*	*	..	..	..	..	..	..	..	..	..	O
61	Locknut for Flanged Inlet Connection .. 1⅛ x 20 x 3/16 x 1½	4	K256	..	..	..	*	*	..	..	..	..	..	..	..	..	..	O

This scan is explicit for non-commercial use and is not intended for financial or material gain by anyone

Wh. ordering Quote Description and Part Number from Correct Column for your Horse Power and Model.

NOTE When Indicates models for which Part is suitable. occurs in more than one column in same line Part is interchangeab

Illustration No.	DESCRIPTION OF PART.	Price. £ s. d.	PART NUMBER 9.96 h.p.	3.49 h.p.	4.98 h.p.	2.48 h.p.	MODELS M1 Twin	M2 Twin	M3 s.v.	M4 s.v.	M5 s.v.	M6 o.h.v.	M7 o.h.c.	M8 o.h.v.	M9 s.v.	M10 o.h.c.	M12 s.v.	For Dealer's Use
	Engine—Continued.																	
62	Steadying Rod for Cylinder Head.. ..	1 3	..	H314-1	..	..	..	..	*	*	*	..	..	..	..	..	..	O
	Steadying Rod for Cylinder Head.. ..	1 3	..	ZA5840	..	..	..	..	..	..	..	*	..	..	..	..	..	..
	Steadying Rod for Cylinder Head.. ..	1 3	..	H314-2	ZA5860	..	..	..	..	..	..	..	*	*	..	..	..	O
	Steadying Rod for Cylinder Head.. ..	1 3	..	..	ZA5880	.	..	..	..	..	..	..	..	.	*	..	..	O
	Steadying Rod for Cylinder Head.. ..	1 3	..	..	ZA5900	..	..	..	..	..	..	..	..	..	..	*	..	..
	Steadying Rod for Cylinder Head.. ..	1 3	..	..	..	F73	..	..	..	..	..	..	..	..	..	..	*	O
63	Nut for Steadying Rod .. .. .. 5/16 x 20 x 3/16 x 17/32	1	..	H320	..	F76	..	..	*	*	*	..	..	..	..	..	*	O
	Nut for Steadying Rod .. .. .. ⅜ x 20 x ¼ x 19/32	2	..	ZA5940	ZA5940	..	..	..	..	..	..	*	*	*	*	*	..	..
64	Clip only for Steadying Rod	4	..	H315	..	F74	..	..	*	*	*	*	..	..	..	..	*	O
	Clip only for Steadying Rod .. Pair..	8	..	ZA5970	..	..	..	..	..	..	..	..	*	..	..	..	..	..
	Clip only for Steadying Rod	4	..	..	ZA5980	..	..	..	..	..	..	..	..	*	*	..	..	..
	Clip only for Steadying Rod .. Pair..	8	..	..	ZA5990	..	..	..	..	..	..	..	..	..	..	*	..	..
N.I.	Bolt only for Clip .. .. .. 5/16 x ⅜ x 20	2	..	H318	G84	F75	..	..	*	*	*	*	..	*	*	..	*	O
	Bolt only for Clip .. .. .. 5/16 x 1¾ x 26	2	..	ZA6010	ZA6010	..	..	..	..	..	..	..	*	..	..	*	..	..
	Nut only for Clip Bolt .. .. .. 5/16 x 20 x ¼ x 19/32	1	..	H320	G212	ZA6020	..	..	*	*	*	*	..	*	*	..	*	O
	Nut only for Clip Bolt .. .. .. 5/16 x 26 x 9/32 x 17/32	1	..	H177	G55-3	..	..	..	..	..	..	..	*	..	..	*	..	O
	Washer for Clip Bolt Nut .. .. 5/16 (Single Spring)	1	..	H163	ZA6040	F77	..	..	*	*	*	*	*	*	*	*	*	O
65	Oil Release Pipe and Union Nut	2 6	K269	..	..	..	*	*	..	..	..	..	..	..	..	..	..	O
	Oil Release Pipe and Union Nut	1 9	..	ZA6070	ZA6070	F81	..	..	*	*	*	*	*	*	*	*	*	O
	Clip to hold Oil Release Pipe to Crankcase ..	3	ZA6080	ZA6080	ZA6080	ZA6080	*	*	*	*	*	*	*	*	*	*	*	..
N.I.	Connection in Crankcase for Oil Release Pipe	10	K270	H326	G72-1	F82	*	*	*	*	*	*	*	*	*	*	*	O
66	Oil Release Pipe for Magneto Chain ..	1 0	..	ZA6100	ZA6100	..	..	..	*	*	*	*	..	*	*	..	..	..
	Connection for Oil Release Pipe in Timing Cover	10	..	H326	ZA6120	..	..	..	*	*	*	*	..	*	*	..	..	O
	Crankcase Oil Union	10	K270	H326	G72-2	ZA6140	*	*	*	*	*	*	*	*	*	*	*	O
N.I.	Oil Regulating Needle Valve	1 9	ZA6160	ZA6160	ZA6160	ZA6160	*	*	*	*	*	*	*	*	*	*	*	..
	Locknut for Oil Regulating Needle Valve 5/16 x 26 x 9/32 x 17/32	3	ZA7160	H177	G55-3	ZA7160	*	*	*	*	*	*	*	*	*	*	*	O
	Lock Plate for Oil Regulating Needle Valve	3	ZA6190	H326-4	G99-4	ZA6190	*	*	*	*	*	*	*	*	*	*	*	O

This scan is explicit for non-commercial use and is not intended for financial or material gain by anyone

Whe. ordering Quote Description and Part Number from Correct Column for your Horse Power and Model.

NOTE When ✻ Indicates models for which Part is suitable. occurs in more than one column in same line Part is interchangea

Illustration No.	DESCRIPTION OF PART.	Price. £ s d.	PART NUMBER 9.56 h.p.	3.49 h.p.	4.98 h.p.	2.48 h.p.	MODELS M1 Twin	M2 Twin	M3 s.v.	M4 s.v.	M5 s.v.	M6 o.h.v.	M7 o.h.c.	M8 o.h.v.	M9 s.v.	M10 o.h.c.	M12 s.v.	For Dealer's Use
	Engine—Continued.																	
	Pin for Locking Plate for Oil Regulating Needle Valve "O" B.A. x 9 16 x 3/8	1	ZA6210	H326-5	G99-5	ZA6210	✻	✻	✻	✻	✻	✻	✻	✻	✻	✻	✻	O
N.I.	Compression Plug	4	K266	H323	G98	..	✻	✻	✻	✻	✻	..	..	..	✻	..	..	O
	Washer for Compression Plug (Small C & A)	1	K267	H324	G22-6	..	✻	✻	✻	✻	✻	..	..	..	✻	..	..	O
	Flywheel Timing Side	19 0	ZA6240	..	..	..	✻	✻	..	..	..	..	..	..	..	..	..	..
	Flywheel Timing Side	16 0	..	H334-1	..	..	..	..	✻	✻	✻	✻	..	..	..	..	..	O
	Flywheel Timing Side	16 0	..	ZA6280	..	.	..	..	..	..	..	..	✻	..	..	..	..	..
	Flywheel Timing Side	19 0	..	..	G73-4	..	..	..	..	..	..	..	..	✻	✻	..	..	O
	Flywheel Timing Side	19 0	..	..	ZA6320	..	..	..	..	..	..	..	..	..	..	✻	..	..
	Flywheel Timing Side	14 6	..	...	..	F85	..	..	..	..	..	..	..	..	..	..	✻	O
67	Flywheel Driving Side	19 0	ZA6360	..	..	..	✻	✻	..	..	..	..	..	..	..	..	..	..
	Flywheel Driving Side	16 0	..	ZA6380	..	..	..	..	✻	✻	✻	✻	..	..	..	..	..	..
	Flywheel Driving Side	16 0	..	ZA6400	..	..	..	..	..	..	..	..	✻	..	..	..	..	..
	Flywheel Driving Side	19 0	..	..	G74-4	..	..	..	..	..	..	..	..	✻	✻	..	..	O
	Flywheel Driving Side	19 0	..	..	ZA6440	..	..	..	..	..	..	..	..	..	..	✻	..	..
	Flywheel Driving Side	14 6	..	..	..	F86	..	..	..	..	..	..	..	..	..	..	✻	O
68	O.H.V. Rocker Box without Cover ..	18 6	..	ZA6480	..	..	..	..	..	..	..	✻	..	..	..	..	..	..
69	O.H.C. Rocker Box without Cover ..	1 8 9	..	H161-3	G54-3	..	..	..	..	..	..	..	✻	..	..	✻	..	O
68	O.H.V. Rocker Box without Cover ..	18 6	..	..	ZA6520	..	..	..	..	..	..	..	..	✻	..	..	..	..
70	Cover only for O.H.V. Rocker Box ..	1 9	..	ZA6540	..	..	..	..	..	..	..	✻	..	..	..	..	..	..
71	Cover only for O.H.C. Rocker Box ..	6 3	..	H164-4	G54-4	..	..	..	..	..	..	..	✻	..	..	✻	..	O
70	Cover only for O.H.V. Rocker Box ..	1 9	..	..	ZA6580	.	..	..	..	..	..	..	..	✻	..	..	..	..
N.I.	Pins for O.H.V. Rocker Box Cover 2 B.A. x 1/2 long x 9/32 dia.	3	..	H164-7	G54-7	..	..	..	..	..	..	✻	..	✻	..	..	..	O
	Pins for O.H.C. Rocker Box Cover 2 B.A. x 7/8 long x 3/8 dia. ..	3	..	H164-5	G54-5	..	..	..	..	..	..	..	✻	..	..	✻	..	O
72	End Cap for O.H.C. Rocker Box	3 9	..	H164-6	G54-6	..	..	..	..	..	..	..	✻	..	..	✻	..	O
N.I.	Pins for End Cap for O.H.C. Rocker Box 2 B.A. x 1/2 long x 9 32 dia.	3	..	H164-7	G54-7	..	..	..	..	..	..	..	✻	..	..	✻	..	O
	O.H.C. Spider Bearing	4 0	..	H164-8	G54-8	..	..	..	..	..	..	..	✻	..	..	✻	..	O

This scan is explicit for non-commercial use and is not intended for financial or material gain by anyone

When Ordering Quote Description and Part Number from Correct Column for your Horse Power and Model.

NOTE When * Indicates models for which Part is suitable. occurs in more than one column in same line Part is interchangeab

Illustration No.	DESCRIPTION OF PART.	Price. £ s. d.	PART NUMBER 9.96 h.p.	3.40 h.p.	4.98 h.p.	2.48 h.p.	M1 Twin	M2 Twin	M3 s.v.	M4 s.v.	M5 s.v.	M6 o.h.v.	M7 o.h.c.	M8 o.h.v.	M9 s.v.	M10 o.h.c.	M12 s.v.	For Dealer's Use
	Engine—Continued.																	
	Pins for O.H.C. Spider Bearing 5/16 x 1½ x 20	3	..	H164-9	G54-9	..	..	..	..	..	..	..	*	..	..	*	..	O
	O.H.C. Inspection Cap	1 9	..	H164-10	G54-10		..	..	..	..	..	..	*	..	..	*	..	O
	Pins for O.H.C. Inspection Cap "2" B.A. x 1⅜ long x 5/16 dia.	4	..	H164-11	G54-11	..	..	..	..	..	..	..	*	..	..	*	..	O
	Distance Pillars for O.H.C. Rocker Box	1 9	..	H164-12	G54-12	..	..	..	..	..	..	..	*	..	..	*	..	O
N.I.	Holding Down Pins for O.H.C. Rocker Box ⅜ x 1¼ x 20	7	..	H164-13	G54-13	..	..	..	..	..	..	..	*	..	..	*	..	O
	Holding Down Pins for O.H.V. Rocker Box ⅜ x 1⅝ x 20	7	..	ZA6700	ZA6700	..	..	..	..	..	..	*	..	*	..	..	..	..
	Holding Down Pins for O.H.V. Rocker Box ⅜ x 1-7/16 x 20	7	..	ZA6710	ZA6710	..	..	..	..	..	..	*	..	*	..	..	..	..
	Rubber Washer for Rocker Box	7	..	H164-14	G54-14	..	..	..	..	..	..	..	*	..	..	*	..	O
	Cork Washer for O.H.C. Rockers per set	6	..	H164-15	G54-15	..	..	..	..	..	..	..	*	..	..	*	..	O
	O.H.V. Rocker with Studs-Exhaust	15 0	..	ZA6740	ZA6740	..	..	..	..	..	..	*	..	*	..	..	..	..
73	O.H.C. Rocker with Studs-Exhaust	17 3	..	H170-2	G54-18	..	..	..	..	..	..	..	*	..	..	*	..	O
	O.H.V. Rocker with Studs-Inlet	15 0	..	ZA6780	ZA6780	..	..	..	..	..	..	*	..	*	..	..	..	..
	O.H.C. Rocker with Studs-Inlet NOTE—Rockers can only be supplied complete.	17 3	..	H167-2	G53-3	..	..	..	..	..	..	..	*	..	..	*	..	O
N.I.	Nut for Rocker Arm, 5/16 x 26 x 9/32 x 17/32	1	..	H177	G55-3	..	..	..	..	..	..	*	..	*	..	..	..	O
	Washer for Nut for Rocker Arm, 5/16 Plain	1	..	ZA6830	ZA6830	..	..	..	..	..	..	*	..	*	..	..	..	..
74	Bush for O.H.V. Rocker	2 3	..	ZA6840	ZA6840	..	..	..	..	..	..	*	..	*	..	..	..	..
	Stud for O.H.V. Valve Rocker 5/16 x 1¾ x 24	8	..	ZA6860	ZA6860	..	..	..	..	..	..	*	..	*	..	..	..	..
75	Stud for O.H.C. Valve Rocker 5/16 x 1-5/32 x 24	8	..	H175-1	G53-1	..	..	..	..	..	..	..	*	..	..	*	..	O
76	Stud for Rocker Ball End	9	..	ZA6870	ZA6870	..	..	..	..	..	..	*	..	*	..	..	..	..
	Stud for Cam Rocker	10	..	H174-2	G55-5	..	..	..	..	..	..	..	*	..	..	*	..	O
	Nut for Cam Rocker Pin, 5/16 x 24 x 5/32 x 17/32	1	..	H174-3	G55-4	..	..	..	..	..	..	*	*	*	..	*	..	O
N.I.	Grease Nipple for Rockers	3	..	H180	G51-2	..	..	..	..	..	..	*	..	*	..	..	..	O
	O.H.C. Rocker Spindle	3 6	..	H182-2	G57-2	..	..	..	..	..	..	..	*	..	..	*	..	O
77	O.H.V. Tappet Tube Overall 9 in. both ends female	4 0	..	ZA6930	..	..	..	..	..	..	..	*	..	..	..	..	..	..
	O.H.V. Tappet Tube Overall 9-15/32 both ends female	4 0	..	..	ZA6950	..	..	..	..	..	..	..	..	*	..	..	..	..
78	Tappet Enclosing Tube (Long)	2 0	..	ZA6970	ZA6970	..	..	..	..	..	..	*	..	*	..	..	..	..
79	Tappet Enclosing Tube (Short)	1 0	..	ZA6990	ZA6990	..	..	..	..	..	..	*	.	*	..	..	..	..

This scan is explicit for non-commercial use and is not intended for financial or material gain by anyone

Whe. ..dering Quote Description and Part Number from Correct Column for your Horse Power and Model.

NOT Whe. ✱ Indicates models for which Part is suitable. ✱ occurs in more than one column in same line Part is interchang..

Illustration No.	DESCRIPTION OF PART.	Price. £ s d.	PART NUMBER 9.96 h.p.	3.49 h.p.	4.98 h.p.	2.48 h.p.	MODELS M1 Twin	M2 Twin	M3 s.v.	M4 s.v.	M5 s.v.	M6 o.h.v.	M7 o.h.c.	M8 o.h.v.	M9 s.v.	M10 o.h.c.	M12 s.v.	For Dealer's Use
	Engine—Continued.																	
80	Nut for Tappet Enclosing Tube (Top) ..	1 3	..	ZA7010	ZA7010	..	..	..	..	..	..	✱	..	✱	..	..	..	..
81	Nut for Tappet Enclosing Tube (Bottom) ..	1 3	..	ZA7020	ZA7020	..	..	..	..	..	..	✱	..	✱	..	..	..	..
	NOTE—Enclosing Tubes (long or short) are only supplied complete with Nuts.																	
	Engine Bolt only, 3⅞ x ½ x 24 ..	4	K287	..	..	..	✱	✱	..	..	..	..	..	..	..	..	..	O
	Engine Bolt only, 4⅞ x ⅜ x 26 ..	4	..	..	G78	..	..	..	..	..	..	..	..	✱	✱	✱	..	O
	Engine Bolt only, 3⅞ x ⅜ x 26 ..	4	K289	..	..	..	✱	✱	..	..	..	..	..	..	..	..	..	O
	Engine Bolt only, 4⅜ x 5/16 x 26 ..	4	K291	..	..	..	✱	✱	..	..	..	..	..	..	..	..	..	O
82	Engine Bolt only, 4⅛ x ⅜ x 26 ..	4	ZA7070	..	..	..	✱	✱	..	..	..	..	..	..	..	..	..	..
	Engine Bolt only, 4¾ x ⅜ x 20 ..	4	..	H345-1	..	..	..	..	✱	✱	✱	✱	✱	..	..	..	..	O
	Engine Bolt only, 4½ x ⅜ x 20 ..	4	..	H345-2	G77	..	..	..	..	..	..	..	✱	✱	✱	✱	..	O
	Engine Bolt only 4¼ x ⅜ x 20	4	..	..	..	F87	..	..	..	..	..	..	..	..	..	..	✱	O
	Engine Bolt only, 5⅛ x ⅜ x 20 ..	4	ZA7110	ZA7110	ZA7110	..	✱	✱	..	..	..	..	✱	..	..	✱	..	O
	Nut for Engine Bolt, ½ x 24 x ⅜ x 45/64 ..	2	K297	..	..	..	✱	✱	..	..	..	..	..	..	..	..	..	O
	Nut for Engine Bolt, ½ x 24 x ¼ x 45/64 ..	2	ZA7130	..	..	..	✱	✱	..	..	..	..	..	..	..	..	..	..
	Nut for Engine Bolt, ⅜ x 26 x ⅜ x 9/16 ..	2	K32	H27-4	G2-7	..	✱	✱	✱	✱	✱	✱	✱	✱	✱	✱	..	O
	Nut for Engine Bolt ⅜ x 26 x ¼ x 39/64 ..	2	..	..	..	ZA7150	..	..	..	..	..	..	..	..	..	..	✱	..
N.I.	Nut for Engine Bolt, 5/16 x 26 x 9/32 x 17/32 ..	2	ZA7100	..	..	..	✱	✱	..	..	..	..	..	..	..	..	..	..
	Washer for Engine Bolt, ½ Single Spring ..	1	K301	..	..	..	✱	✱	..	..	..	..	..	..	..	..	..	O
	Washer for Engine Bolt, ⅜ Single Spring ..	1	K300	H160	G79-1	F89	✱	✱	✱	✱	✱	✱	✱	✱	✱	✱	✱	O
	Washer for Engine Bolt, 5/16 Single Spring ..	1	K299	..	..	..	✱	✱	..	..	..	..	..	..	..	..	..	O
83	Front Engine Plate (Left or Right Hand) ..	3 6	ZA7200	..	..	..	✱	✱	..	..	..	..	..	..	..	..	..	..
	Front Engine Plate (Left or Right Hand) ..	1 3	..	H839-1	..	..	..	..	✱	✱	✱	✱	✱	..	..	..	..	O
84	Front Engine Plate (Left or Right Hand) ..	1 3	..	..	G85-4	..	..	..	..	..	..	..	..	✱	✱	✱	..	O
	Front Engine Plate (Left or Right Hand) ..	1 3	..	..	..	F382	..	..	..	..	..	..	..	..	..	..	✱	O
N.I.	Rear Engine Plate (Left or Right Hand) ..	2 6	ZA7280	..	..	..	✱	✱	..	..	..	..	..	..	..	..	..	..
85	Rear Engine Plate (Left or Right Hand) ..	1 3	..	H842-1	..	..	..	..	✱	✱	✱	✱	✱	..	..	..	..	O
	Rear Engine Plate (Left or Right Hand) ..	1 3	..	..	G85-5	..	..	..	..	..	..	..	..	✱	✱	✱	..	O

This scan is explicit for non-commercial use and is not intended for financial or material gain by anyone

W Ordering Quote Description and Part Number from Correct Column for your Horse Power and Model.

NO Wn ✲ Indicates models for which Part is suitable. ✲ occurs in more than one column in same line Part is interchan le

Illustration No.	DESCRIPTION OF PART.	Price. £ s. d.	PART NUMBER 9.96 h.p.	3.49 h.p.	4.98 h.p.	2.49 h.p.	MODELS M1 Twin	M2 Twin	M3 s.v.	M4 s.v.	M5 s.v.	M6 o.h.v.	M7 o.h.c.	M8 o.h.v.	M9 s.v.	M10 o.h.c.	M12 s.v.	For Dealer's Use
	Engine—Continued.																	
85	Rear Engine Plate (Left or Right Hand) ..	1 3	..	..	..	F383	..	..	..	..	..	..	..	..	..	..	✲	O
86	Engine Sprocket (State number of teeth) ..	12 0	ZA7360	..	..	..	✲	✲	..	..	..	..	..	..	..	..	..	..
	Engine Sprocket (State number of teeth) ..	11 0	..	H357	..	..	..	..	✲	✲	✲	✲	✲	..	..	..	..	O
	Engine Sprocket (State number of teeth) ..	12 0	..	..	ZA7400	..	..	..	..	..	..	..	.	✲	✲	✲	..	..
	Engine Sprocket (State number of teeth) ..	8 6	..	..	..	F91	..	..	..	..	..	..	..	..	..	..	✲	O
87	Engine Sprocket Sleeve	6 6	K326	..	..	..	✲	✲	..	..	..	..	..	..	..	..	..	O
	Engine Sprocket Sleeve	5 6	..	H362	..	F93	..	..	✲	✲	✲	✲	..	..	..	..	✲	O
	Engine Sprocket Sleeve	3 9	..	ZA7430	..	..	..	..	..	..	..	..	✲	..	..	..	..	..
	Engine Sprocket Sleeve	6 6	..	..	G89	..	..	..	..	..	..	..	..	✲	✲	..	..	O
	Engine Sprocket Sleeve	3 9	..	..	ZA7520	..	..	..	..	..	..	..	..	..	..	✲	..	..
88	Engine Sprocket Driving Dog	3 9	K333	H360	G88	F92	✲	✲	✲	✲	✲	✲	✲	✲	✲	✲	✲	O
89	Engine Shock Absorber Spring	1 3	ZA7560	ZA7560	ZA7560	..	✲	✲	✲	✲	✲	✲	✲	✲	✲	✲	..	..
	Engine Shock Absorber Spring	1 3	..	..	..	ZA7580	..	..	..	..	..	..	..	..	..	..	✲	..
90	Engine Shock Absorber Spring Adjusting Nut	1 3	ZA7600	ZA7600	ZA7600	..	✲	✲	✲	✲	✲	✲	✲	✲	✲	✲	..	..
	Engine Shock Absorber Spring Adjusting Nut	1 3	..	..	..	ZA7620	..	..	..	..	..	..	..	..	..	..	✲	..
N.I.	Cotter for Engine Shock Absorber Spring .. 3/32 x 1¼	1	K339	H368	G92-1	F97	✲	✲	✲	✲	✲	✲	✲	✲	✲	✲	✲	O
91	Engine Shaft Sleeve Nut, 2-7/32 Overall ..	7	K337	..	..	..	✲	✲	..	..	..	..	..	..	..	..	..	O
	Engine Shaft Sleeve Nut, 1-11/16 Overall ..	7	..	H364	..	F94	..	..	✲	✲	✲	✲	✲	..	..	..	✲	O
	Engine Shaft Sleeve Nut, 2-11/32 Overall ..	7	..	..	G90	..	..	..	..	..	..	..	..	✲	✲	..	..	O
	Engine Shaft Sleeve Nut, 2-5/32 Overall ..	7	..	..	G90-1	..	..	..	..	..	..	..	..	..	..	✲	..	O
N.I.	Engine Shock Absorber Cap	2 0	K343	..	G86	..	..	✲	..	..	..	..	..	✲	✲	✲	..	O
	Pin for Engine Shock Absorber Cap each.. 3/16 x 5/8 x 2¼	1	K344	..	G86-1	..	..	✲	..	..	..	..	..	✲	✲	✲	..	O
	Washer for Engine Shock Absorber Cap .. 3/16 Single Spring	1	ZA7760	..	G86-2	..	..	✲	..	..	..	..	..	✲	✲	✲	..	O

This scan is explicit for non-commercial use and is not intended for financial or material gain by anyone

Whe dering Quote Description and Part Number from Correct Column for your Horse Power and Model.

NOT ✻ Indicates models for which Part is suitable.
Wh ✻ occurs in more than one column in same line Part is interchan e.

Illustration No.	DESCRIPTION OF PART.	Price. £ s. d.	PART NUMBER 9.96 h.p.	3.49 h.p.	4.98 h.p.	2.48 h.p.	MODELS M1 Twin	M2 Twin	M3 s.v.	M4 s.v.	M5 s.v.	M6 o.h.v.	M7 o.h.c.	M8 o.h.v.	M9 s.v.	M10 o.h.c.	M12 s.v.	For Dealer's Use
	Magneto Fittings																	
92	Magneto Shield	3 6	K1383	..	..	..	✻	✻	..	..	..	..	..	..	..	..	..	O
	Magneto Shield	3 6	..	H1386-1	G344-1	..	..	..	✻	✻	✻	✻	✻	✻	✻	✻	..	O
	Magneto Shield	3 6	..	..	..	ZA7810	..	..	..	..	..	..	..	..	..	..	✻	..
	Magdyno Shield	4 6	K1385	..	..	..	✻	✻	..	..	..	..	..	..	..	..	..	O
	Magdyno Shield .. .. .. NOTE—State Type of Magneto or Magdyno Fitted	4 6	..	H1386-2	G344-3	ZA7850	..	..	✻	✻	✻	✻	✻	✻	✻	✻	✻	O
N.I.	Pin for fixing Magneto Shield 5/16 x ½ x 20	2	ZA7870	ZA7870	ZA7870	..	✻	✻	✻	✻	✻	✻	✻	✻	✻	✻	..	..
	Pin for fixing Magneto Shield	2	..	..	..	ZA7880	..	..	..	..	..	..	..	..	..	..	✻	..
93	Magneto Sprocket	3 6	K1392	H1391	G340	F733	✻	✻	✻	✻	✻	✻	..	✻	✻	..	✻	O
	Magneto Sprocket	3 6	..	H1391-1	G340-1	..	..	..	..	..	..	..	✻	..	..	✻	..	O
94	Magneto Sprocket Sleeve 1⅛ Overall ..	2 0	K1394	..	..	..	✻	✻	..	..	..	..	..	..	..	..	..	O
	Magneto Sprocket Sleeve 1 5/16 Overall ..	2 0	..	H1393	G341	..	..	..	✻	✻	✻	✻	..	✻	✻	..	..	O
	Magneto Sprocket Sleeve 1 1/16 Overall ..	2 0	..	H1393-1	G341-1	..	..	..	..	..	..	..	✻	..	..	✻	..	O
	Magneto Sprocket Sleeve 1 7/16 Overall ..	2 0	..	..	..	F734	..	..	..	..	..	..	..	..	..	..	✻	O
95	Peg Washer for Magneto Sprocket Sleeve ..	7	K1395	H1394	G342	F735	✻	✻	✻	✻	✻	✻	✻	✻	✻	✻	✻	O
96	Locknut for Magneto Sprocket Sleeve ⅜ x 20 x 11/16 under head ..	7	K1399	H1396-1	ZA8020	..	✻	✻	..	..	..	..	✻	..	..	✻	..	O
	Locknut for Magneto Sprocket Sleeve ⅜ x 20 x 31/32 under head ..	7	..	H1396	G343	..	..	..	✻	✻	✻	✻	..	✻	✻	..	..	O
	Locknut for Magneto Sprocket Sleeve ⅜ x 20 x 1-3/32 under head ..	7	..	..	..	F736	..	..	..	..	..	..	..	..	..	..	✻	O
97	Magneto Platform	4 6	ZA8000	..	..	..	✻	✻	..	..	..	..	..	..	..	..	..	..
	Magneto Platform	4 0	..	ZA8080	..	..	..	..	✻	✻	✻	✻	..	..	..	..	..	..
	Magneto Platform	4 0	..	H1399-2	..	..	..	..	..	..	..	..	✻	..	..	..	..	O
	Magneto Platform	4 0	..	..	ZA8120	..	..	..	..	..	..	..	..	✻	✻	..	..	..
	Magneto Platform	4 0	..	..	G93-2	..	..	..	..	..	..	..	..	..	..	✻	..	O
	Magneto Platform	4 0	..	..	..	F737	..	..	..	..	..	..	..	..	..	..	✻	O
N.I.	Magneto Platform Pin (Short) .. .. ⅜ x 16 x ⅝ x 3/16 head thick	2	K305	..	..	..	✻	✻	..	..	..	..	..	..	..	..	..	O
	Magneto Platform Pin (Short) .. .. ⅜ x 16 x ½ x ⅝ head thick	3	..	ZA8190	ZA8190	ZA8190	..	..	✻	✻	✻	✻	✻	✻	✻	✻	✻	..
	Magneto Platform Pin (Long) .. .. ⅜ x 16 x ¾ x 3/16 head thick	2	ZA8200	..	..	..	✻	✻	..	..	..	..	..	..	..	..	..	O

This scan is explicit for non-commercial use and is not intended for financial or material gain by anyone

NO[illegible] ✲ Indicates models for which Part is suitable.
W[illegible] ✲ occurs in more than one column in same line Part is intercha[illegible]ble.

Whe[illegible] Ordering Quote Description and Part Number from

Correct Column for your Horse Power and Model.

Illustration No.	DESCRIPTION OF PART.	Price. £ s. d.	PART NUMBER 9.96 h.p	3.49 h.p.	4.98 h.p.	2.48 h.p.	MODELS M1 Twin	M2 Twin	M3 s.v.	M4 s.v.	M5 s.v.	M6 o.h.v.	M7 o.h.c.	M8 o.h.v.	M9 s.v.	M10 o.h.c.	M12 s.v.	For Dealer's Use
	Magneto Fittings. (Continued).																	
	Magneto Platform Pin (Long)	4	..	ZA8210	ZA8210	ZA8210	..	..	..	✲	✲	✲	✲	✲	✲	✲	✲	O
	Magneto Platform Pin (Long) (as K365) ..	2	..	ZA8220	..	..	..	..	✲	..	..	..	..	..	..	..	..	O
N.I.	Washer for Magneto Platform Pin ..	1	K300	H160	G79-1	F89	✲	✲	✲	✲	✲	✲	✲	✲	✲	✲	✲	O
	Distance Piece for Magneto Platform ..	4	K1410	..	..	..	✲	✲	..	..	..	..	..	..	..	..	..	O
	Bolt for Magneto Platform 5/16 x 3⅝ x 20	7	K1411	..	..	..	✲	✲	..	..	..	..	..	..	..	..	..	O
	Link for Magneto Platform Bolt ..	10	K1409	..	..	..	✲	✲	..	..	..	..	..	..	..	..	..	O

This scan is explicit for non-commercial use and is not intended for financial or material gain by anyone

Whe dering Quote Description and Part Number from

Correct Column for your Horse Power and Model.

NO Indicates models for which Part is suitable.
Whe. occurs in more than one column in same line Part is interchang.

Illustration No.	DESCRIPTION OF PART.	Price. £ s. d.	PART NUMBER 9.96 h.p.	3.49 h.p.	4.98 h.p.	2.48 h.p.	MODELS M1 Twin	M2 Twin	M3 s.v.	M4 s.v.	M5 s.v.	M6 o.h.v.	M7 o.h.c	M8 o.h.v.	M9 s.v.	M10 o.h.c.	M12 s.v.	For Dealer's Use
	Exhaust System.																	
	NOTE Early Models M4,5,6,7,8,9,10, were Fitted with Round Type of Silencer. Later Models have Flat Type Silencer. Type fitted must be stated when ordering Parts of Exhaust system.																	
	All M6 Two Port M8 Two Port and M12 Models are fittedwith RoundTypeSilencer.																	
98	Exhaust System complete with Exhaust Pipes, Silencer, etc.	2 16 6	ZA8400	..	..	..	*	*	..	..	..	..	..	..	..	..	..	..
	Exhaust System complete with Exhaust Pipe, Silencer, etc.	2 6 0	..	ZA8420	..	..	..	..	..	*	*	..	..	..	..	..	..	..
	Exhaust System complete with Exhaust Pipe, Silencer, etc.	2 6 0	..	ZA8440	..	..	..	..	..	..	..	*	..	..	..	..	..	..
	Exhaust System complete with Exhaust Pipes, Silencer, etc (Two Port)	4 5 6	..	ZA8460	..	..	..	..	..	..	..	*2P	..	..	..	..	..	..
	Exhaust System complete with Exhaust Pipe, Silencer, etc	2 10 0	..	ZA8480	..	..	..	..	..	..	..	..	*	..	..	..	..	..
99	Exhaust System complete with Exhaust Pipe, Silencer, etc.	2 6 0	..	..	ZA8500	..	..	..	..	..	..	..	..	*	..	..	..	..
	Exhaust System complete with Exhaust Pipes, Silencer, etc. (Two Port)	4 5 6	..	..	ZA8520	..	..	..	..	..	..	..	..	*2P	..	..	..	..
	Exhaust System complete with Exhaust Pipe, Silencer, etc.	2 6 0	..	..	ZA8540	..	..	..	..	..	..	..	..	..	*	..	..	..
	Exhaust System complete with Exhaust Pipe, Silencer, etc.	2 10 0	..	..	ZA8560	..	..	..	..	..	..	..	..	..	..	*	..	..
	Exhaust System complete with Exhaust Pipes, Silencer, etc.	1 19 9	..	..	..	ZA8580	..	..	..	..	..	..	..	..	..	..	*	..
100	Silencer only (Flat Type)	18 6	ZA8600	..	..	..	*	*	..	..	..	..	..	..	..	..	..	..
	Silencer only in front of Engine (Touring) ..	8 0	..	H1196-1	..	..	..	..	*	..	..	..	..	..	..	..	..	O
N.I.	Silencer only (Round Type)	17 6	..	ZA8640	ZA8640	..	..	..	..	*	*	*	*	*	*	*	..	..
	Silencer only (Round Type) (Two Port)	17 6	..	ZA8660	ZA8660	..	..	..	..	..	..	*2P	..	*2P	..	..	..	..
	Silencer only (Round Type)	17 6	..	..	..	ZA8680	..	..	..	..	..	..	..	..	..	..	*	..
101	Silencer only (Flat Type)	16 0	..	ZA8700	ZA8700	..	..	..	..	*	*	*	*	*	*	*	..	..
102	Front Baffle Pipe (Flat Type)	2 9	ZA8720	ZA8720	ZA8720	..	*	*	..	*	*	*	*	*	*	*	..	..
103	Fish Tail (Flat Type)	8 6	ZA8740	ZA8740	ZA8740	..	*	*	..	*	*	*	*	*	*	*	..	..
104	Pin for Fish Tail (Flat Type) 5/16 x 5/8 x 20	3	..	H537	G173-8	..	..	..	..	*	*	*	*	*	*	*	..	..
N.I.	Tail Pipe (Touring)	4 3	..	H1204	..	..	..	..	*	..	..	..	..	..	..	..	..	O
	Tail Pipe (Round Type)..	2 6	..	ZA8780	ZA8780	ZA8780	.	..	..	*	*	*	*	*	*	*	*	..
105	Clip for Tail Pipe (Touring)	7	..	H1206	..	..	..	..	*	..	..	..	..	..	..	..	..	O
	Clip for Tail Pipe (either type)	10	ZA8820	H1237	G353-A	F627	*	*	..	*	*	*	*	*	*	*	*	O

This scan is explicit for non-commercial use and is not intended for financial or material gain by anyone

Wher dering Quote Description and Part Number from

Correct Column for your Horse Power and Model.

Illustration No.	DESCRIPTION OF PART.	Price. £ s. d.	PART NUMBER 9.96 h.p.	3.49 h.p.	4.98 h.p.	2.48 h.p.	NOTE Whe ✻ Indicates models for which Part is suitable. ✻ occurs in more than one column in same line Part is interchange	M1 Twin	M2 Twin	M3 s.v.	M4 s.v.	M5 s.v.	M6 o.h.v.	M7 o.h.c.	M8 o.h.v.	M9 s.v.	M10 o.h.c.	M12 s.v.	For Dealer's Use
	Exhaust System (Continued).																		
	Pin for Clip for Tail Pipe 5/16 x ¾ x 20 ..	2	ZA8840	ZA8840	ZA8840	F320		✻	✻	..	✻	✻	✻	✻	✻	✻	✻	✻	O
104	Pin for Clip for Tail Pipe 5/16 x ¾ x 20 (Two Port)	2	..	ZA8840	..	..		..	..	..	..	..	✻2P	..	..	..	..	..	O
	Pin for Clip for Tail Pipe 5/16 x ⅝ x 20 (Two Port)	2	..	..	G173-8	..		..	..	..	..	..	..	..	✻2P	..	..	..	..
	Nut for Pin for Clip for Tail Pipes 5/16 x 20 x ¼ x 19/32 ..	1	K707	H320	G212	ZA6020		✻	✻	..	✻	✻	✻	✻	✻	✻	✻	✻	O
	Washer for Nut for Clip for Tail Pipe 5/16 Single Spring ..	1	K299	H163	ZA6040	F77		✻	✻	..	✻	✻	✻	✻	✻	✻	✻	✻	O
	Pin for Silencer (Touring) ¼ x 1 1/16 x 26 ..	2	..	H063	..	..		..	..	✻	..	..	..	..	..	..	..	..	O
	Nut for Pin for Silencer (Touring) .. ¼ x 26 x ½ x 7/16 ..	1	..	YA4380	..	..		..	..	✻	..	..	..	..	..	..	..	..	O
N.I.	Silencer Body Clip (Touring)	2 0	..	H1199-1	..	..		..	..	✻	..	..	..	..	..	..	..	..	O
	Pin for Silencer Body Clip (Touring) 5/16 x ⅝ x 20 ..	2	..	H537	..	..		..	..	✻	..	..	..	..	..	..	..	..	O
	Nut for Silencer Body Clip (Touring) 5/16 x 20 x ¼ x 19/32 ..	1	..	H320	..	..		..	..	✻	..	..	..	..	..	..	..	..	O
	Washer for Nut for Silencer Body Clip (Touring) 5/16 Single Spring ..	1	..	H163	..	..		..	..	✻	..	..	..	..	..	..	..	..	O
	Chainstay Clip for Supporting Strap (either type) ..	3	..	H1244	..	..		..	..	..	✻	✻	✻	✻	..	..	..	..	O
	Chainstay Clip for Supporting Strap ..	3	..	H1244	..	..		..	..	..	..	..	✻2P	..	..	..	..	..	O
105	Chainstay Clip for Supporting Strap (either type) ..	3	ZA7080	..	G354	..		✻	✻	..	..	..	..	..	✻	✻	✻	..	O
	Chainstay Clip for Supporting Strap ..	3	..	..	G354	..		..	..	..	..	..	..	..	✻2P	..	..	..	O
	Chainstay Clip for supporting Strap (round type) ..	3	..	..	..	F630		..	..	..	..	..	..	..	..	..	..	✻	O
	Pin for Chainstay Clip for supporting Strap .. 5/16 x ¾ x 20 (either type)	2	ZA8840	ZA8840	ZA8840	F320		✻	✻	..	✻	✻	✻	✻	✻	✻	✻	✻	O
	Nut for Chainstay Clip for supporting Strap .. 5/16 x 20 x ¼ x 19/32 (either type)	1	K707	H320	G212	ZA6020		✻	✻	..	✻	✻	✻	✻	✻	✻	✻	✻	O
	Washer for Nut for Chainstay Clip for Supporting Strap 5/16 Single Spring (either type)	1	K299	H163	ZA6040	F77		✻	✻	..	✻	✻	✻	✻	✻	✻	✻	✻	O
N.I.	Supporting Strap only (Round Type) ..	5	..	H1242	..	..		..	..	..	✻	✻	✻	..	..	..	..	..	O
	Supporting Strap only (Two Port).. ..	5	..	ZA9040	..	..		..	..	..	..	..	✻2P	..	..	..	..	..	..
	Supporting Strap only (Round Type) ..	5	..	ZA9060	ZA9060	..		..	..	..	..	..	..	✻	✻	✻	✻	..	..
	Supporting Strap only (Two Port).. ..	5	..	..	ZA9080	..		..	..	..	..	..	..	..	✻2P	..	..	..	..
	Supporting Strap only (Round Type) ..	5	..	..	..	ZA9100		..	..	..	..	..	..	..	..	..	..	✻	..
107	Exhaust Pipe only (Front)	6 9	ZA9120	..	..	..		✻	✻	..	..	..	..	..	..	..	..	..	..
108	Exhaust Pipe only (Rear)	14 3	ZA9140	.	..	..		✻	✻	..	..	..	..	..	.	..	..	..	..

This scan is explicit for non-commercial use and is not intended for financial or material gain by anyone

When Ordering Quote Description and Part Number from Correct Column for your Horse Power and Model.

NOT ✲ Indicates models for which Part is suitable.
Whe ✲ occurs in more than one column in same line Part is interchange

Illustration No.	DESCRIPTION OF PART.	Price. £ s. d.	PART NUMBER 9.96 h.p.	3.49 h.p.	4.98 h.p.	2.48 h.p.	M1 Twin	M2 Twin	M3 s.v.	M4 s.v.	M5 s.v.	M6 o.h.v.	M7 o.h.c.	M8 o.h.v.	M9 s.v.	M10 o.h.c.	M12 s.v.	For Dealer's Use
	Exhaust System (Continued).																	
N.I.	Exhaust Pipe only (Touring)	4 0	..	H1198-1	..	..	..	..	✲	..	..	..	..	..	..	..	..	O
	Exhaust Pipe only (Round Type)	13 3	..	H1248	..	..	..	..	..	✲	✲	..	..	..	..	..	..	O
	Exhaust Pipe only (Flat Type)	13 3	..	ZA9180	..	..	..	..	..	✲	✲	..	..	..	..	..	..	..
	Exhaust Pipe only (Round Type)	13 3	..	ZA9200	..	..	..	..	..	..	..	✲	..	..	..	..	..	..
	Exhaust Pipe only (Flat Type)	13 3	..	ZA9210	..	..	..	..	..	..	..	✲	..	..	..	..	..	..
	Exhaust Pipe only (Round Type)(Driving Side) (Two Port)	13 3	..	ZA9220	..	..	..	..	..	..	..	✲2P	..	..	..	..	..	..
	Exhaust Pipe only (Round Type)(Timing Side) (Two Port)	13 3	..	ZA9240	..	..	..	..	..	..	..	✲2P	..	..	..	..	..	..
	Exhaust Pipe only (Round Type)	14 3	..	ZA9260	..	..	..	..	..	..	..	..	✲	..	..	..	..	..
	Exhaust Pipe only (Flat Type)	14 3	..	ZA9270	..	..	..	..	..	..	..	..	✲	..	..	..	..	..
109	Exhaust Pipe only (Round Type).. ..	13 3	..	..	ZA9280	..	..	..	..	..	..	..	..	✲	..	..	..	..
	Exhaust Pipe only (Flat Type)	13 3	..	..	ZA9290	..	..	..	..	..	..	..	..	✲	..	..	..	..
	Exhaust Pipe only (Round Type)(Driving Side) (Two Port)	13 3	..	..	ZA9300	..	..	..	..	..	..	..	..	✲2P	..	..	..	..
	Exhaust Pipe only (Round Type) (Timing Side) (Two Port)	13 3	..	..	ZA9320	..	..	..	..	..	..	..	..	✲2P	..	..	..	..
	Exhaust Pipe only (Round Type)	13 3	..	..	ZA9340	..	..	..	..	..	..	..	..	..	✲	..	..	..
	Exhaust Pipe only (Flat Type)	13 3	..	..	ZA9350	..	..	..	..	..	..	..	..	..	✲	..	..	..
	Exhaust Pipe only (Round Type)	13 3	..	..	ZA9360	..	..	..	..	..	..	..	..	..	..	✲	..	..
	Exhaust Pipe only (Flat Type)	13 3	..	..	ZA9370	..	..	..	..	..	..	..	..	..	..	✲	..	..
	Exhaust Pipe only (Round Type)	13 3	..	..	..	ZA9380	..	..	..	..	..	..	..	..	..	..	✲	..
110	Exhaust Pipe Lockring (Either Type) ..	2 9	ZA9400	..	..	..	✲	✲	..	..	..	..	..	..	..	..	..	..
	Exhaust Pipe Lockring (Either Type) ..	2 9	..	ZA9420	ZA9420	..	..	..	✲	✲	✲	..	..	..	✲	..	..	..
	Exhaust Pipe Lockring (Either Type) ..	5 3	..	ZA9440	ZA9440	..	..	..	..	..	.	✲	..	✲	..	..	..	..
111	Exhaust Pipe Lockring (Two Port) ..	2 9	..	ZA9420	ZA9420	..	..	..	..	..	..	✲2P	..	✲2P	..	..	..	..
	Exhaust Pipe Lockring (Either Type) ..	5 2	..	H1262	G349-2	..	..	..	..	..	..	..	✲	..	..	✲	..	O
	Exhaust Pipe Lockring	2 9	..	..	..	ZA9480	..	..	..	..	..	..	..	..	..	..	✲	..
112	Small Exhaust Pipe Clip (Flat Type) ..	1 6	ZA9500	..	..	..	✲	✲	..	..	..	..	..	..	..	..	..	..
113	Pin for Small Exhaust Pipe Clip 5/16 x 5/8 x 20 (Flat Type)	2	K559	..	..	..	✲	✲	..	..	..	..	..	..	..	..	..	..

This scan is explicit for non-commercial use and is not intended for financial or material gain by anyone

When Ordering Quote Discription and Part Number from Correct Column for your Horse Power and Model.

NOTE: ✲ Indicates models for which Part is suitable.
When ✲ occurs in more than one column in same line Part is interchange.

Illustration No.	DESCRIPTION OF PART.	Price. £ s. d.	PART NUMBER 9.96 h.p.	3.49 h.p.	4.98 h.p.	2.48 h.p.	MODELS M1 Twin	M2 Twin	M3 s.v.	M4 s.v.	M5 s.v.	M6 o.h.v.	M7 o.h.c.	M8 o.h.v.	M9 s.v.	M10 o.hc.	M12 s.v.	For Dealer's Use
	Exhaust System. (Continued).																	
N.I.	Nut for Small Exhaust Pipe Clip (Flat Type) 5/16 x 20 x ¼ x 19/32	1	K707	..	..	..	✲	✲	..	..	..	..	..	..	..	..	..	O
N.I.	Washer for Nut for Small Exhaust Pipe Clip (Flat Type) 5/16 Single Spring	1	K299	..	..	..	✲	✲	..	..	..	..	..	..	..	..	..	O
114	Footrest Clip for Exhaust Pipe (Round Type)	1 3	..	H1259	ZA9550	..	..	..	..	✲	✲	✲	✲	✲	✲	✲	..	O
114	Footrest Clip for Exhaust Pipe (Round Type)	1 3	..	..	ZA9550	..	..	..	..	..	..	..	..	✲2P	..	..	..	..
114	Footrest Clip for Exhaust Pipe (Flat Type)	1 3	..	ZA9560	ZA9560	..	..	..	..	✲	✲	✲	✲	✲	✲	✲	..	..
114	Footrest Clip for Exhaust Pipe (Round Type)	1 3	..	..	..	ZA9550	..	..	..	..	..	..	..	..	..	..	✲	..
114	Front Exhaust Pipe Clip (Round Type) (Two Port) ..	1 3	..	ZA9570	..	..	..	..	..	..	..	✲2P	..	..	..	..	..	..
N.I.	Front Exhaust Pipe Steady Rod (Round Type) (Two Port)	1 3	..	ZA9590	..	..	..	..	..	..	..	✲2P	..	..	..	..	..	..
N.I.	Distance Tube for Steady Rod (Round Type)	1 3	..	ZA9600	..	..	..	..	..	..	..	✲2P	..	..	..	..	..	..
115	Clip for Silencer (Either Type) ..	1 3	ZA9610	ZA9610	ZA9610	..	✲	✲	..	✲	✲	✲	✲	✲	✲	✲	..	..
N.I.	Clip for Silencer (Round Type) (Two Port)	1 3	..	ZA9610	ZA9610	..	..	..	..	..	..	✲2P	..	✲2P	..	..	..	..
116	Pin for Clip for Silencer (Flat Type) 5/16 x ¾ x 20 ..	2	ZA8840	ZA8840	ZA8840	..	✲	✲	..	✲	✲	✲	✲	✲	✲	✲	..	..
N.I.	Pin for Clip for Silencer (Round Type) (Two Port) 5/16 x ¾ x 20 ..	2	..	ZA8840	..	..	..	..	..	..	..	✲2P	..	..	..	..	..	..
N.I.	Pin for Clip for Silencer (Round Type) (Two Port) 5/16 x ⅝ x 20 ..	2	..	..	G173-8	..	..	..	..	..	..	..	..	✲2P	..	..	..	O
N.I.	Nut for Clip for Silencer (Flat Type) 5/16 x 20 x ¼ x 19/32 ..	1	K707	H320	G212	..	✲	✲	..	✲	✲	✲	✲	✲	✲	✲	..	O
N.I.	Nut for Clip for Silencer (Round Type) 5/16 x 20 x ¼ x 19/32 ..	1	..	H320	G212	..	..	..	..	..	..	✲2P	..	✲2P	..	..	..	O
N.I.	Washer for Nut for Clip for Silencer (Flat Type) 5/16 Single Spring ..	1	K299	H163	ZA6040	..	✲	✲	..	✲	✲	✲	✲	✲	✲	✲	..	O
N.I.	Washer for Nut for Clip for Silencer (Round Type) (Two Port) 5/16 Single Spring ..	1	..	H163	ZA6040	..	..	..	..	..	..	✲2P	..	✲2P	..	..	..	O
N.I.	Washer for Nut for Clip for Silencer (Round Type) (Two Port) 5/16 Plain ..	1	..	..	ZA6830	..	..	..	..	..	..	..	..	✲2P	..	..	..	O
N.I.	Large Clip round Silencer (Round Type) (Two Port) ..	1 6	..	..	ZA9700	..	..	..	..	..	..	..	..	✲2P	..	..	..	..
N.I.	Pin for Large Clip round Silencer (Round Type) (Two Port) 5/16 x ¾ x 20 ..	2	..	..	ZA8840	..	..	..	..	..	..	..	..	✲2P	..	..	..	..
N.I.	Nut for Large Clip round Silencer (Round Type) (Two Port) 5/16 x 20 x ¼ x 19/32 ..	1	..	..	G212	..	..	..	..	..	..	..	..	✲2P	..	..	..	O
N.I.	Washer for Nut for Large Clip round Silencer (Round Type) (TwoPort) 5/16 Single Spring	1	..	..	ZA6040	..	..	..	..	..	..	..	..	✲2P	..	..	..	..
N.I.	Steady Strap for Silencer (Round Type) (Two Port) ..	1 3	..	ZA9750	..	..	..	..	..	..	..	✲2P	..	..	..	..	..	..

This scan is explicit for non-commercial use and is not intended for financial or material gain by anyone

When ordering Quote Description and Part Number from Correct Column for your Horse Power and Model.

NOT When ✻ Indicates models for which Part is suitable. ✻ occurs in more than one column in same line Part is interchange .e

Illustration No.	DESCRIPTION OF PART.	Price. £ s. d.	PART NUMBER 9.96 h.p.	3.49 h.p.	4.98 h.p.	2.48 h.p.	MODELS M1 Twin	M2 Twin	M3 s.v.	M4 s.v.	M5 s.v.	M6 o.h.v.	M7 o.h.c.	M8 o.h.v.	M9 s.v.	M10 o.h.c.	M12 s.v.	For Dealer's Use.
	Gearbox.																	
	Gearbox, complete with Clutch and Footstarter	13 10 3	YA1	..	YA1	..	✻	✻	..	..	..	..	..	✻	✻	..	..	..
	Gearbox, complete with Clutch and Footstarter (Wide Ratio)	12 7 3	..	YA20	..	..	..	..	✻	✻	✻	..	..	..	..	..	..	..
	Gearbox, complete with Clutch and Footstarter (Close Ratio)	12 7 3	..	YA40	..	..	..	..	..	..	..	✻	..	..	..	..	..	..
	Gearbox, complete with Clutch and Footstarter	11 10 0	..	..	..	YA60	..	..	..	..	..	..	..	..	..	.	✻	..
N.I.	Gearbox, complete with Clutch only (Non-Footstarter type, Close Ratio) ..	11 4 3	..	YA80	..	..	..	..	..	..	..	..	✻	..	..	..	..	..
	Gearbox, complete with Clutch only (Non-Footstarter type, Close Ratio) ..	11 15 9	..	..	YA100	..	..	..	..	..	..	..	..	..	..	✻	..	..
	Gearbox, Shell, with Cover, less Bearings ..	2 8 3	YA120	..	YA120	..	✻	✻	..	..	..	..	..	✻	✻	✻	..	..
	Gearbox Shell, with Cover, less Bearings ..	2 0 3	..	YA140	..	..	..	..	✻	✻	✻	✻	✻	..	..	..	..	..
	Gearbox Shell, with Cover, less Bearings ..	1 14 6	..	..	..	YA160	..	..	..	..	..	..	..	..	..	..	✻	..
	Gearbox Shell, without Cover and Bearings ..	1 17 3	YA180	..	YA180	..	✻	✻	..	..	..	..	..	✻	✻	✻	..	..
	Gearbox Shell, without Cover and Bearings ..	1 8 9	..	YA200	..	..	..	..	✻	✻	✻	✻	✻	..	..	..	..	..
117	Gearbox Shell, without Cover and Bearings ..	1 5 9	..	..	..	YA220	..	..	..	..	..	..	..	..	..	..	✻	..
	Gearbox Shell, with Cover and Bearings ..	4 0 9	YA240	..	YA240	..	✻	✻	..	..	..	..	..	✻	✻	✻	..	..
	Gearbox Shell, with Cover and Bearings ..	3 10 6	..	YA260	..	..	..	..	✻	✻	✻	✻	✻	..	..	..	..	..
	Gearbox Shell, with Cover and Bearings ..	3 7 0	..	..	..	YA280	..	..	..	..	..	..	..	..	..	..	✻	..
118	Felt Washer for Gearbox Shell	3	K406	H389	G106-2	F109	✻	✻	✻	✻	✻	✻	✻	✻	✻	✻	✻	O
	Gearbox Cover, with Bearings	1 3 3	YA310	..	YA310	..	✻	✻	..	..	..	..	..	✻	✻	✻	..	..
	Gearbox Cover, with Bearings	1 3 3	..	YA330	..	..	..	..	✻	✻	✻	✻	✻	..	..	..	..	..
119	Gearbox Cover, with Bearings	1 0 3	..	..	..	YA350	..	..	..	..	..	..	..	..	..	..	✻	..
	Gearbox Cover, without Bearings	9 9	YA360	..	YA360	..	✻	✻	..	..	..	..	..	✻	✻	✻	..	..
	Gearbox Cover, without Bearings	9 9	..	YA390	..	..	..	..	✻	✻	✻	✻	✻	..	..	..	..	..
	Gearbox Cover, without Bearings	8 6	..	..	..	YA410	..	..	..	..	..	..	..	..	..	..	✻	..
	Paper Washer for Gearbox Cover ..	2	K414	..	YA430	..	✻	✻	..	..	..	..	..	✻	✻	✻	..	O
N.I.	Paper Washer for Gearbox Cover ..	2	..	H394	..	..	..	..	✻	✻	✻	✻	✻	..	..	..	..	O
	Paper Washer for Gearbox Cover ..	2	..	.	..	F112	..	..	..	..	..	..	..	..	..	..	✻	O
120	Gearbox Bearing, 30 x 62 x 16 m.m. ..	12 3	K415	H395	G109	F113	✻	✻	✻	✻	✻	✻	✻	✻	✻	✻	✻	O

This scan is explicit for non-commercial use and is not intended for financial or material gain by anyone

W. Ordering Quote Description and Part Number from Correct Column for your Horse Power and Model.

Gearbox—Continued.

Illustration No.	DESCRIPTION OF PART.	Price. £ s. d.	PART NUMBER 9.96 h.p.	3.49 h.p.	4.98 h.p.	2.48 h.p.
121	Gearbox Bearing, 15 x 37 x 9 m.m. (3 used) ..	6 9	K416	H396	G110	F114
122	Gearbox Stud (Front) Plain .. .. 7/16 x 2⅞ x 26 and 14	4	K418	..	G112	..
	Gearbox Stud (Front) Plain .. .. 7/16 x 2⅞ x 26 and 14	4	..	H398-1	..	F116
123	Gearbox Adjusting Stud (Rear) Shouldered .. 7/16 x 2⅞ x 26 and 14	4	K419	..	G113	..
	Gearbox Adjusting Stud (Rear) Shouldered .. 7/16 x 2⅞ 26 and 14	4	..	H399-1	..	F117
N.I.	Nut for Gearbox Studs 7/16 x 26 x ⅜ x 45/64 ..	3	YA520	YA520	YA520	YA520
	Washer for above Nut 7/16 Plain	1	K421	H401	G113-2	F119
	Gearbox Adjusting Sleeve	10	YA540	YA540	YA540	YA540
	Eyebolt for Adjusting Sleeve .. .. ⅜ x 2 underhead x 16	1 9	YA560	YA560	YA560	..
	Eyebolt for Adjusting Sleeve .. .. ⅜ x 1¾ underhead x 16	1 9	..	..	..	YA580
124	High Speed Dog Wheel (Wide Ratio) ..	1 0 9	YA600	..	YA600	..
	High Speed Dog Wheel (Wide Ratio) ..	19 0	..	YA620	..	..
	High Speed Dog Wheel (Close Ratio) ..	1 0 9	..	..	YA640	..
	High Speed Dog Wheel (Close Ratio) ..	19 0	..	YA660	..	..
	High Speed Dog Wheel	17 3	..	..	..	YA680
125	High Speed Dog Locknut 1-1/16 x 20 x 3/16 x ⅜	3	K427	H411	G115	F124
126	High Speed Dog Locking Plate	2	YA710	YA710	YA710	YA710
127	Sliding Dog Wheel (Wide and Close Ratio)..	13 9	YA720	..	YA720	..
	Sliding Dog Wheel (Wide Ratio).. ..	13 0	..	YA740	..	..
	Sliding Dog Wheel (Close Ratio).. ..	13 0	..	YA760	..	..
	Sliding Dog Wheel	12 0	..	..	..	YA780
128	Low Speed Dog Wheel (Close Ratio) ..	5 9	..	..	G122-1	..
	Low Speed Dog Wheel (Wide Ratio) ..	5 9	K434	H419	G122	..
	Low Speed Dog Wheel (Close Ratio) ..	5 9	..	H421	..	..
	Low Speed Dog Wheel	5 3	..	..	..	F128
129	Layshaft complete with Gears (Wide Ratio)	1 8 9	YA880	..	YA880	..

NO Wh. ✻ Indicates models for which Part is suitable.
✻ occurs in more than one column in same line Part is interchan. ble.

MODELS M1 Twin	M2 Twin	M3 s.v.	M4 s.v.	M5 s.v.	M6 o.h.v.	M7 o.h.c.	M8 o.h.v.	M9 s.v.	M10 o.h.c.	M12 s.v.	For Dealer's Use
✻	✻	✻	✻	✻	✻	✻	✻	✻	✻	✻	O
✻	✻	..	..	..	..	..	✻	✻	✻	..	O
..	..	✻	✻	✻	✻	✻	..	..	..	✻	O
✻	✻	..	..	..	..	..	✻	✻	✻	..	O
..	..	✻	✻	✻	✻	✻	..	..	..	✻	O
✻	✻	✻	✻	✻	✻	✻	✻	✻	✻	✻	..
✻	✻	✻	✻	✻	✻	✻	✻	✻	✻	✻	O
✻	✻	✻	✻	✻	✻	✻	✻	✻	✻	✻	..
✻	✻	✻	✻	✻	✻	✻	✻	✻	✻	..	..
..	..	..	..	..	..	..	..	..	..	✻	..
✻	✻	..	..	..	..	..	✻	✻	..	..	..
..	..	✻	✻	✻	..	..	..	..	..	..	..
..	..	..	..	..	..	..	✻	✻	✻	..	..
..	..	..	.	..	✻	✻	..	..	..	..	..
..	..	..	..	..	..	..	.	..	..	✻	..
✻	✻	✻	✻	✻	✻	✻	✻	✻	✻	✻	O
✻	✻	✻	✻	✻	✻	✻	✻	✻	✻	✻	..
✻	✻	..	..	..	..	..	✻	✻	✻	..	..
..	..	✻	✻	✻	..	..	..	..	..	..	..
..	..	..	..	..	✻	✻	..	..	..	..	..
..	..	..	..	..	..	..	..	..	..	✻	..
..	..	..	..	..	..	..	✻	✻	✻	..	O
✻	✻	✻	✻	✻	.	..	✻	✻	..	..	O
..	..	..	..	..	✻	✻	..	..	..	..	O
..	..	..	..	..	..	..	..	..	..	✻	O
✻	✻	..	..	..	..	..	✻	✻	..	..	..

This scan is explicit for non-commercial use and is not intended for financial or material gain by anyone

When Ordering Quote Description and Part Number from Correct Column for your Horse Power and Model.

NOT When ✻ Indicates models for which Part is suitable. ✻ occurs in more than one column in same line Part is interchangeable.

Illustration No.	DESCRIPTION OF PART.	Price. £ s. d.	PART NUMBER 9.96 h.p.	3.49 h.p.	4.98 h.p.	2.48 h.p.	MODELS M1 Twin	M2 Twin	M3 s.v.	M4 s.v.	M5 s.v.	M6 o.h.v.	M7 o.h.c.	M8 o.h.v.	M9 s.v.	M10 o.h.c.	M12 s.v.	For Dealer's Use
	Gearbox—Continued.																	
129	Layshaft complete with Gears (Wide Ratio)	1 7 6	..	YA900	..	..	..	..	✻	✻	✻	..	..	..	.	..	..	..
	Layshaft complete with Gears (Close Ratio)	1 7 6	..	..	YA920	..	..	..	..	..	..	..	..	✻	✻	✻	..	..
	Layshaft complete with Gears (Close Ratio)	1 7 6	..	YA940	..	..	..	..	..	..	..	✻	✻	..	..	..	..	..
	Layshaft complete with Gears	1 5 0	..	..	..	YA960	..	..	..	..	..	..	..	..	..	..	✻	..
130	Layshaft Spindle only	7 0	YA980	YA980	YA980	..	✻	✻	✻	✻	✻	✻	✻	✻	✻	✻	..	..
	Layshaft Spindle only	5 9	..	..	..	YA1000	..	..	..	..	..	..	..	.	..	..	✻	..
N.I.	Woodruffe Keys No. 3 for above (6 used) ..	2	..	..	..	F47	..	..	..	..	..	..	..	..	..	..	✻	O
	Woodruffe Keys No. 6 for above (7 used) ..	2	K151	H202	ZA3750	..	✻	✻	✻	✻	✻	✻	✻	✻	✻	✻	..	O
	Woodruffe Keys No. 6 for above (1 used) ..	2	..	..	..	F46	..	.	..	..	..	..	..	..	..	..	✻	O
131	Large Layshaft Wheel (Wide Ratio) ..	9 3	K441	..	G127	..	✻	✻	..	..	..	..	..	✻	✻	.	..	O
	Large Layshaft Wheel (Wide Ratio) ..	8 9	..	H435	..	..	..	..	✻	✻	✻	..	..	..	..	..	..	O
	Large Layshaft Wheel (Close Ratio) ..	9 3	..	..	G127-1	..	..	..	..	..	..	..	..	✻	✻	✻	..	O
	Large Layshaft Wheel (Close Ratio) ..	8 9	..	H437	..	..	..	..	..	..	..	✻	✻	..	..	..	..	O
	Large Layshaft Wheel	8 0	..	..	..	F133	..	..	..	..	..	..	..	..	.	..	✻	O
132	Medium Layshaft Wheel (Wide and Close Ratio)	7 0	K443	..	G128	..	✻	✻	..	..	..	..	..	✻	✻	✻	..	O
	Medium Layshaft Wheel (Wide Ratio) ..	7 0	..	H439	..	..	..	..	✻	✻	✻	..	..	..	..	..	..	O
	Medium Layshaft Wheel (Close Ratio) .. Same as K443	7 0	..	H441	.	..	..	..	..	..	..	✻	✻	..	..	..	..	O
	Medium Layshaft Wheel	6 3	..	..	..	F134	..	..	..	..	..	..	..	..	..	..	✻	O
133	Small Layshaft Wheel (Wide Ratio) ..	5 0	K445	H443	G129	..	✻	✻	✻	✻	✻	..	..	✻	✻	..	..	O
	Small Layshaft Wheel (Close Ratio) ..	5 0	..	H446	G129-1	..	..	..	..	..	..	✻	✻	✻	✻	✻	..	O
	Small Layshaft Wheel	5 0	..	..	..	F135	..	..	..	..	..	..	..	..	..	..	✻	O
134	Gearbox Sprocket	9 3	K446	..	G114	..	✻	✻	..	..	..	..	..	✻	✻	✻	..	O
	Gearbox Sprocket	9 3	..	H449-1	..	..	..	..	✻	✻	✻	✻	✻	..	..	..	..	O
	Gearbox Sprocket	8 0	..	..	..	F136	..	..	..	..	..	..	..	..	..	..	✻	O
135	Gearbox Mainshaft (11 in. Splined) ..	17 9	YA1340	..	YA1340	..	✻	✻	..	..	..	..	..	✻	✻	✻	..	..
	Gearbox Mainshaft (10¼ in. Splined) ..	17 9	..	YA1360	..	..	..	..	✻	✻	✻	✻	✻	..	..	..	..	..

This scan is explicit for non-commercial use and is not intended for financial or material gain by anyone

When Ordering Quote Description and Part Number from Correct Column for your Horse Power and Model.

* Indicates models for which Part is suitable.
* occurs in more than one column in same line Part is interchangeable.

Illustration No.	DESCRIPTION OF PART.	Price. £ s. d.	PART NUMBER 9.96 h.p.	3.49 h.p.	4.98 h.p.	2.48 h.p.	MODELS M1 Twin	M2 Twin	M3 s.v.	M4 s.v.	M5 s.v.	M6 o.h.v.	M7 o.h.c	M8 o.h.v.	M9 s.v.	M10 o.h.c.	M12 s.v.	For Dealer's Use.
	Gearbox—Continued.																	
135	Gearbox Mainshaft (9-13/16 in. Splined) ..	17 9	..	..	..	YA1380	..	..	..	..	..	..	..	..	..	..	*	..
N.I.	Gearbox Mainshaft Locknut ¾ x 18 x 5/32 x 1	2	K452	H454	G161	F138	*	*	*	*	*	*	*	*	*	*	*	O
136	Gearshifter Arch with Arm	11 0	YA1410	..	YA1410	..	*	*	..	..	..	..	..	*	*	*	..	..
	Gearshifter Arch with Arm	10 3	..	YA1430	..	..	..	..	*	*	*	*	*	..	..	..	..	..
	Gearshifter Arch with Arm	10 3	..	..	..	F139	..	..	..	..	..	..	..	..	..	..	*	O
137	Gearshifter Arch only	6 3	K456	..	G140-2	..	*	*	..	..	..	..	..	*	*	*	..	O
	Gearshifter Arch only	5 9	..	H457	..	..	..	..	*	*	*	*	*	..	..	..	..	O
	Gearshifter Arch only	5 9	..	..	..	F140	..	..	..	..	..	..	..	..	..	..	*	..
138	Gearshifter Arm only	5 0	YA1510	..	YA1510	..	*	*	..	..	..	..	..	*	*	*	..	..
	Gearshifter Arm only	4 6	..	YA1530	..	..	..	..	*	*	*	*	*	..	..	..	..	..
	Gearshifter Arm only	4 6	..	..	.	F141	..	..	..	..	..	..	..	..	..	..	*	O
139	Cotter for Gearshifter Arm ½ x ⅜ long ..	1	K459	H458-3	YA1560	F142	*	*	*	*	*	*	*	*	*	*	*	O
140	Gearshifter Bush	2 0	K461	..	G141	..	*	*	..	..	..	..	..	*	*	*	..	O
	Gearshifter Bush	2 0	..	H460	..	F143	..	..	*	*	*	*	*	..	..	..	*	O
141	Gearshifter Lever	3 6	YA1620	..	..	..	*	*	..	..	..	..	..	..	..	..	..	..
	Gearshifter Lever	3 6	..	YA1640	..	.	..	..	*	*	*	*	*	..	..	..	..	..
	Gearshifter Lever	3 6	..	..	YA1660	..	..	..	..	..	..	..	..	*	*	*	..	..
	Gearshifter Lever	3 6	..	..	..	YA1680	..	..	..	..	..	..	..	..	..	..	*	..
142	Pin for Gearshifter Lever ¼ x ⅛ x 20 ..	2	K467	H465	G144	F145	*	*	*	*	*	*	*	*	*	*	*	O
143	Thrust Washer	7	K469	H468	G137	F146	*	*	*	*	*	*	*	*	*	*	*	O
144	Thrust Washer Locknut .. .. ½ x 24 x 7/32 x 1¼ (L.H. Thread)	10	K470	H469	G138	F147	*	*	*	*	*	*	*	*	*	*	*	O
145	Thrust Washer Additional Locknut .. ½ x 24 x 3/16 x 13/16 (L.H. Thread)	3	YA1750	H471	YA1750	F148	*	*	*	*	*	*	*	*	*	*	*	O
146	Ball Thrust Race	1 3	K471	H473	G139	F149	*	*	*	*	*	*	*	*	*	*	*	O
147	Gearbox Oil Plug	10	K472	H474	G136	F150	*	*	*	*	*	*	*	*	*	*	*	O
148	†Oil Level Lever	6	YA1800	YA1800	YA1800	YA1800	*	*	*	*	*	*	*	*	*	*	*	..
N.I.	†Washer for Oil Level Lever .. .. 7/16 Double Spring	2	K475	H476	G135-1	F152	*	*	*	*	*	*	*	*	*	*	*	O
149	†Oil Level Lever Pin 5/16 x 13/16 x 20 ..	2	K474	H477	G135	F153	*	*	*	*	*	*	*	*	*	*	*	O

NOTE—See Pages 6—7 for Gear Ratio Tables

This scan is explicit for non-commercial use and is not intended for financial or material gain by anyone

When ordering Quote Description and Part Number from Correct Column for your Horse Power and Model.

NOT. ✻ Indicates models for which Part is suitable.
When ✻ occurs in more than one column in same line Part is interchange..

Illustration No.	DESCRIPTION OF PART.	Price £ s. d.	PART NUMBER 9.96 h.p.	3.49 h.p.	4.98 h.p.	2.48 h.p.	MODELS M1 Twin	M2 Twin	M3 s-v.	M4 s.v.	M5 s.v.	M6 o.h.v.	M7 o.h.c.	M3 o.h.v.	M9 s.v.	M10 o.h.c.	M12 s.v.	For Dealer's Use
	Gearbox—Continued.																	
N.I.	Plug for Oil level Lever Hole (used instead of Oil level Lever)	4	K266	H323	G98	F79	✻	✻	✻	✻	✻	✻	✻	✻	✻	✻	✻	O
	Gearbox Cover Pin (Large Head) 5/16 x 1¼ x 20	3	K476	H478	G111	..	✻	✻	✻	✻	✻	✻	✻	✻	✻	✻	..	O
	Gearbox Cover Pin Bottom (Small Head) 5/16 x 1-1/16 x 20	3	..	H261	..	..	..	..	✻	✻	✻	✻	✻	..	..	..	..	O
N.I.	Washer for Gearbox Cover Pin 5/16 Single Spring	1	K299	H163	ZA6040	..	✻	✻	✻	✻	✻	✻	✻	✻	✻	✻	..	O
	Gearbox Cover Pin (Large Head) ¼ x 1 x 20	3	..	..	..	F154	..	..	..	..	..	..	..	..	..	..	✻	O
	Washer for Gear Box Cover Pin ¼ Single Spring	1	..	..	..	F155	..	..	..	..	..	..	..	..	..	..	✻	O
	Clutch.																	
	Clutch Sprocket with Bearing	1 1 0	YA1900	..	YA1900	..	✻	✻	..	..	..	..	..	✻	✻	✻	..	..
	Clutch Sprocket with Bearing	1 1 0	..	H481	..	..	..	..	✻	✻	✻	✻	✻	..	..	..	..	O
	Clutch Sprocket with Bearing	1 1 0	..	..	..	F160	..	..	..	..	..	..	..	..	..	..	✻	O
150	Clutch Sprocket without Bearing	15 9	YA1960	..	YA1960	..	✻	✻	..	..	..	..	..	✻	✻	✻	..	..
	Clutch Sprocket without Bearing	15 9	..	H483	..	..	..	..	✻	✻	✻	✻	✻	..	..	..	..	O
	Clutch Sprocket without Bearing	15 9	..	..	..	F161	..	..	..	..	..	..	..	..	..	..	✻	O
151	Clutch Sprocket Bearing only 1⅛ x ¼ x 5/16	5 3	K482	H484	G146	F162	✻	✻	✻	✻	✻	✻	✻	✻	✻	✻	✻	O
	Clutch Fixed Plate, with Ratchet Plate fitted	12 6	YA2040	..	YA2040	..	✻	✻	..	..	..	..	..	✻	✻	..	..	..
	Clutch Fixed Plate, with Ratchet Plate fitted	12 6	..	YA2060	..	..	..	..	✻	✻	✻	✻	..	..	..	..	..	..
152	Clutch Fixed Plate, with Ratchet Plate fitted	12 6	..	..	..	YA2080	..	..	..	..	..	..	..	..	..	..	✻	..
	Clutch Fixed Plate	10 6	..	YA2100	..	..	..	..	..	..	..	..	✻	..	..	..	..	..
	Clutch Fixed Plate	10 6	..	..	YA2120	..	..	..	..	..	..	..	..	..	..	✻	..	..
	Clutch Sliding Plate	7 6	YA2140	..	YA2140	..	✻	✻	..	..	..	..	..	✻	✻	✻	..	..
153	Clutch Sliding Plate	7 6	..	YA2160	.	..	..	..	✻	✻	✻	✻	✻	..	..		..	..
	Clutch Sliding Plate	7 6	..	..	..	YA2180	..	..	..	..	..	..	..	..	..	..	✻	..
	Spring for Clutch Sliding Plate	1	K491	..	G162	..	✻	✻	..	..	..	..	..	✻	✻	✻	..	O
N.I.	Screw for Clutch Sliding Plate, ⅛ x ½ x 38	1	K493	..	G167	..	✻	✻	..	..	..	..	..	✻	✻	✻	..	O
	Locking Pin for Clutch Sliding Plate ⅛ x ½ x 38	1	K494	..	G165	..	✻	✻	..	..	..	..	..	✻	✻	✻	..	O

This scan is explicit for non-commercial use and is not intended for financial or material gain by anyone

When ering Quote Description and Part Number from Correct Column for your Horse Power and Model.

NOTE When * Indicates models for which Part is suitable. occurs in more than one column in same line Part is interchange

Illustration No.	DESCRIPTION OF PART.	Price. £ s. d.	PART NUMBER 9.96 h.p.	3.49 h.p.	4.98 h.p.	2.48 h.p.	MODELS M1 Twin	M2 Twin	M3 s.v.	M4 s.v.	M5 s.v.	M6 o.h.v.	M7 o.h.c.	M8 o.h.v.	M9 s.v.	M10 o.h.c.	M12 s.v.	For Dealer's Use.
	Clutch—Continued.																	
N.I.	Cotter for Locking Pin	1	K495	..	G166	..	*	*	..	..	..	..	..	*	*	*	..	O
N.I.	Coil Spring for Clutch Sliding Plate Screw ..	1	K496	..	YA2220	..	*	*	..	..	..	..	..	*	*	*	..	O
N.I.	Washer for Clutch Sliding Plate Pins 3/16 plain ..	1	ZA2230	..	ZA2230	..	*	*	..	..	..	..	..	*	*	*	..	O
154	Key for Clutch Sliding Plate	8	K487	..	G150	..	*	*	..	..	..	..	..	*	*	*	..	O
154	Key for Clutch Sliding Plate	8	..	H490	..	F167	..	..	*	*	*	*	*	..	..	..	*	O
155	Clutch Floating Plate	7 0	YA2280	..	YA2280	..	*	*	..	..	..	..	..	*	*	*	..	..
156	Clutch Dished Plate	4 6	YA2300	..	YA2300	..	*	*	..	..	..	..	..	*	*	*	..	..
157	Clutch Spring	1 3	YA2320	YA2320	YA2320	YA2320	*	*	*	*	*	*	*	*	*	*	*	..
158	Adjusting Nut for Clutch Spring	1 3	K520	H493-1	G155-1A	F169	*	*	*	*	*	*	*	*	*	*	*	O
159	Short Push Rod, ½ x 5/16 Roller	3	K498	H498	G156	F171	*	*	*	*	*	*	*	*	*	*	*	O
160	Long Push Rod, 9⅛ overall length ..	10	YA2380	..	YA2380	..	*	*	..	..	..	..	..	*	*	*	..	..
160	Long Push Rod, 8 49/64 overall length ..	10	..	YA2400	..	..	..	..	*	*	*	*	*	..	..	..	..	..
160	Long Push Rod, 7 27/32 overall length ..	10	..	..	..	YA2420	..	..	..	..	..	..	..	..	..	..	*	..
161	Clutch Operating Lever at end of Gearbox ..	4 0	K509	H501	G163	F172	*	*	*	*	*	*	*	*	*	*	*	O
162	Adjusting Pin for Clutch Operating Lever (Plated) ¼ x 1 x 26	3	K503	H508	G158	F177	*	*	*	*	*	*	*	*	*	*	*	O
163	Nut for Clutch Operating Lever Adjusting Pin for Push Rod (Plated) ¼ x 26 x ½ x ⅜	2	K505	H510	G157	F178	*	*	*	*	*	*	*	*	*	*	*	O
N.I.	Hinge Pin for Clutch Operating Lever (Plated) ¼ x 1 7/16 Plain	5	K510	H502	G164	F173	*	*	*	*	*	*	*	*	*	*	*	O
N.I.	Washer for Hinge Pin for Clutch Operating Lever (Plated) ¼ plain	1	K111	H134	G27-2	F35	*	*	*	*	*	*	*	*	*	*	*	O
N.I.	Cotter for Hinge Pin for Clutch Operating Lever	1	YA2490	YA2490	YA2490	YA2490	*	*	*	*	*	*	*	*	*	*	*	O
164	Clutch Cap at end of Gearbox, with Bush ..	5 6	K512	H504	G168	F174	*	*	*	*	*	*	*	*	*	*	*	O
165	Bush only for Clutch Cap	10	K513	H505	G169	F175	*	*	*	*	*	*	*	*	*	*	*	O
N.I.	Pins for Clutch Cap 3/16 x ⅛ x 24	1	K429	H413	G121-1	F126	*	*	*	*	*	*	*	*	*	*	*	O

This scan is explicit for non-commercial use and is not intended for financial or material gain by anyone

W Ordering Quote Description and Part Number from Correct Column for your Horse Power and Model.

NOTE ✻ Indicates models for which Part is suitable.
When ✻ is in more than one column in same line Part is interchangeable.

Illustration No.	DESCRIPTION OF PART.	Price. £ s. d.	PART NUMBER 9.96 h.p.	3.49 h.p.	4.98 h.p.	2.48 h.p.	MODELS M1 Twin	M2 Twin	M3 s.v.	M4 s.v.	M5 s.v.	M6 o.h.v.	M7 o.h.c.	M8 o.h.v.	M9 s.v.	M10 o.h.c.	M12 s.v.	For Dealer's Use.
	Footstarter.																	
N.I.	Footstarter Quadrant, with Shaft	8 6	YA2550	..	YA2550	..	✻	✻	..	..	..	..	..	✻	✻	..	..	..
	Footstarter Quadrant, with Shaft	8 6	..	YA2570	..	..	..	..	✻	✻	✻	✻	..	..	..	..	..	..
	Footstarter Quadrant, with Shaft	8 6	..	..	..	YA2590	..	..	..	..	..	..	..	..	..	..	✻	..
165	Footstarter Quadrant only	6 6	YA2610	..	YA2610	..	✻	✻	..	..	..	..	..	✻	✻	..	..	..
	Footstarter Quadrant only	6 6	..	YA2630	..	..	..	..	✻	✻	✻	✻	..	..	..	..	..	..
	Footstarter Quadrant only	6 6	..	..	..	YA2650	..	..	..	..	..	..	..	..	..	..	✻	..
167	Pinch Pin for Footstarter Quadrant .. 3/8 x 1-5/32 x 20	3	K536	H525-2	G175-1	YA2670	✻	✻	✻	✻	✻	✻	..	✻	✻	..	✻	O
	Pinch Pin for Footstarter Quadrant .. 5/16 x 1-9/32 x 20	3	..	..	..	YA2680	..	..	..	..	..	..	..	..	..	..	✻	..
168	Footstarter Shaft, 10-9/16 long	1 9	YA2690	..	YA2690	..	✻	✻	..	..	..	..	..	✻	✻	..	..	..
	Footstarter Shaft, 9-11/16 long	1 9	..	YA2710	..	..	..	..	✻	✻	✻	✻	..	..	..	..	..	..
	Footstarter Shaft, 9-1/16 long	1 9	..	..	..	YA2730	..	..	..	..	..	.	..	..	..	..	✻	..
169	Footstarter Tube, 8¾ long	1 9	YA2750	..	YA2750	..	✻	✻	..	..	..	..	..	✻	✻	..	..	..
	Footstarter Tube, 7¾ long	1 9	..	YA2770	..	..	..	..	✻	✻	✻	✻	..	..	..	..	..	..
	Footstarter Tube, 7¼ long	1 9	..	..	..	YA2790	..	..	..	..	..	..	..	..	..	..	✻	..
170	Fixing Pin for Footstarter Tube .. 5/16 x 1⅝ x 20	3	YA2810	YA2810	YA2810	YA2810	✻	✻	✻	✻	✻	✻	..	✻	✻	..	✻	..
171	Bush for fixing Pin for Footstarter Tube ..	4	YA2820	YA2820	YA2820	YA2820	✻	✻	✻	✻	✻	✻	..	✻	✻	..	✻	..
	Stop for Footstarter	1 3	YA2840	..	YA2840	..	✻	✻	..	..	..	..	..	✻	✻	..	..	..
N.I.	Stop for Footstarter	1 3	..	YA2860	..	..	..	..	✻	✻	✻	✻	..	..	..	..	..	..
	Stop for Footstarter	1 3	..	..	..	ZA2880	..	..	..	..	..	..	..	..	..	..	✻	..
	Grease Nipple, for Footstarter Tube ..	3	546	H180	G54-2	F196	✻	✻	✻	✻	✻	✻	..	✻	✻	..	✻	O
172	Footstarter Crank	5 9	K551	H528-1	G173-1	F198	✻	✻	✻	✻	✻	✻	..	✻	✻	..	✻	O
173	Pinch Pin for Footstarter Crank .. .. 3/8 x 1 9/32 x 20	4	YA2930	YA2930	YA2930	YA2930	✻	✻	✻	✻	✻	✻	..	✻	✻	..	✻	..
N.I.	Footstarter Pedal complete	5 3	K554	H531	G173-2	..	✻	✻	✻	✻	..	✻	..	✻	✻	..	..	O
174	Footstarter Pedal	2 3	..	H530	..	F200	..	..	..	..	✻	..	..	..	..	..	✻	O
175	Footstarter Pedal Spindle	2 3	K555	H533	G173-4	..	✻	✻	✻	✻	..	✻	..	✻	✻	..	..	O
N.I.	Nut for Footstarter Pedal Spindle .. .. ½ x 24 x ¾ x 45/64	3	ZA7130	ZA7130	ZA7130	ZA7130	✻	✻	✻	✻	✻	✻	..	✻	✻	..	✻	O
176	Outside Washer for Footstarter Pedal ..	6	K557	H585	G173-6	..	✻	✻	✻	✻	..	✻	..	✻	✻	..	..	O

This scan is explicit for non-commercial use and is not intended for financial or material gain by anyone

Wher dering Quote Description and Part Number from

Correct Column for your Horse Power and Model.

Illustration No.	DESCRIPTION OF PART.	Price £ s. d.	PART NUMBER 9.96 h.p.	3.49 h.p.	4.98 h.p.	2.48 h.p.
	Footstarter—Continued.					
N.I.	Fixing Pin for outside Washer, 5/10 x 5/8 x 20	2	K559	H537	G173-8	..
178	Footstarter Pedal Rubber	1 6	K560	H534	G173-5	..
179	Footstarter Ratchet Wheel	5 3	YA3080	YA3080	YA3080	YA3080
180	Footstarter Ratchet Spring ..	4	K564	H540	G180	..
	Footstarter Ratchet Spring	4	..	..	..	YA3100
181	Return Spring for Footstarter Quadrant ..	9	YA3120	YA3120	YA3120	YA3120
N.I.	Fixing Pin for Return Spring for Footstarter Quadrant 2 B.A. 9/32 x ½	1	YA3140	YA3140	YA3140	YA3140
	Change Speed Parts.					
182	Change Speed Quadrant only	8 9	YA4000	YA4000	YA4000	..
	Change Speed Quadrant only	8 9	..	..	..	YA4020
N.I.	Pin for fixing Change Speed Quadrant to Tank "O" B.A. x ½	2	YA4040	YA4040	YA4040	YA4040
	Washer for Pin for fixing Change Speed Quadrant to Tank, 9/32 Single Spring	1	YA4060	YA4060	YA4060	YA4060
183	Change Speed Lever, with Knob	13 3	..	H556	..	F217
	Change Speed Lever, with Knob	13 3	YA4100	..	YA4100	..
184	Knob only for Change Speed Lever ..	10	K589	H558	G185-1	F218
N.I.	Washer for Knob for Change Speed Lever, 7/16, Single Spring	1	WA1520	WA1520	WA1520	WA1520
185	Fulcrum Pin for Change Speed Lever ..	4	YA4160	H562	G186-1	F219
N.I.	Washer for Fulcrum Pin for Change Speed Lever, 7/32 Double Spring	1	K594	H565	G186	F221
	Locknut for Fulcrum Pin for Change Speed Lever, 5/16 x 20 x ½	2	YA4200	H564	G186-2	F220
186	Change Speed Rod only, with Yoke End ..	2 3	YA4220	..	..	..
	Change Speed Rod only..	1 9	..	YA4240	YA4240	..
	Change Speed Rod only.	1 9	..	..	..	YA4260
187	Yoke End for Change Speed Rod	9	YA4280	..	..	..
	Yoke End for Change Speed Rod	7	..	YA4300	YA4300	YA4300
	Pin for Yoke End for Change Speed Rod ..	1	YA4320	YA4320	YA4320	YA4320
N.I.	Cotter for Pin for Yoke End for Change Speed Rod	1	YA2490	YA2490	YA2490	YA2490
	Locknut for Change Speed Rod .. .. 5/16 x 20 x 3/16 x 17/32, Plated	1	YA4360	..	..	..
	Locknut for Change Speed Rod	1	..	H510	G157	F178

NOTE ✻ Indicates models for which Part is suitable.
WI ✻ occurs in more than one column in same line Part is interchan le.

MODELS M1 Twin	M2 Twin	M3 s.v.	M4 s.v.	M5 s.v.	M6 o.h.v.	M7 o.h.c.	M8 o.h.v.	M9 s.v.	M10 o.h.c.	M12 s.v.	For Dealer's Use.
✻	✻	✻	✻	..	✻	..	✻	✻	..	..	O
✻	✻	✻	✻	..	✻	..	✻	✻	..	..	O
✻	✻	✻	✻	✻	✻	..	✻	✻	..	✻	..
✻	✻	✻	✻	✻	✻	..	✻	✻	..	..	O
..	..	..	..	..	..	..	..	..	..	✻	..
✻	✻	✻	✻	✻	✻	..	✻	✻	..	✻	..
✻	✻	✻	✻	✻	✻	..	✻	✻	..	✻	..
✻	✻	✻	✻	✻	✻	✻	✻	✻	✻	..	..
..	..	..	..	..	..	..	..	..	..	✻	..
✻	✻	✻	✻	✻	✻	✻	✻	✻	✻	✻	..
✻	✻	✻	✻	✻	✻	✻	✻	✻	✻	✻	..
..	..	✻	✻	✻	✻	✻	..	..	..	✻	O
✻	✻	..	..	..	..	..	✻	✻	✻	..	..
✻	✻	✻	✻	✻	✻	✻	✻	✻	✻	✻	O
✻	✻	✻	✻	✻	✻	✻	✻	✻	✻	✻	O
✻	✻	✻	✻	✻	✻	✻	✻	✻	✻	✻	O
✻	✻	✻	✻	✻	✻	✻	✻	✻	✻	✻	O
✻	✻	✻	✻	✻	✻	✻	✻	✻	✻	✻	O
✻	✻	..	..	..	..	..	..	..	..	..	..
..	..	✻	✻	✻	✻	✻	✻	✻	✻	..	..
..	..	..	..	..	..	..	..	..	..	✻	..
✻	✻	..	..	..	..	..	..	..	..	..	..
..	..	✻	✻	✻	✻	✻	✻	✻	✻	✻	..
✻	✻	✻	✻	✻	✻	✻	✻	✻	✻	✻	..
✻	✻	✻	✻	✻	✻	✻	✻	✻	✻	✻	..
✻	✻	..	..	..	..	..	..	..	..	..	..
..	..	✻	✻	✻	✻	✻	✻	✻	✻	✻	O

This scan is explicit for non-commercial use and is not intended for financial or material gain by anyone

When Ordering Quote Description and Part Number from Correct Column for Your Horse Power and Model.

NC ✻ Indicates model for which Part is suitable.
W ✻ occurs in more than one column in same line Part is interchat ble.

Illustration No.	DESCRIPTION OF PART.	Price. £ s. d.	PART NUMBER 9.56 h.p.	3.49 h.p.	4.98 h.p.	2.48 h.p.	MODELS M1 Twin	M2 Twin	M3 s.v.	M4 s.v.	M5 s.v.	M6 o.h.v.	M7 o.h.c.	M8 o.h.v.	M9 s.v.	M10 o.h.c.	M12 s.v.	For Dealer's Use
	Front Wheel.																	
	Spare Wheel complete with Centre Spindle and Dust Cap, less Tyre & Brackets	2 10 0	WA1	..	..	..	✻	✻	..	.	..	..	..	..	..	..	..	..
	Hub Dust Cap for Spare Wheel	3 9	WA20	..	..	..	✻	✻	..	..	..	..	..	..	..	..	..	..
	Front Wheel, with expanding Brake, less Cable. Control Lever, Tyre & Tube 26 x 3.50 Tyre ..	5 3 6	WA40	..	..	..	✻	✻	..	..	..	..	..	..	..	..	..	..
	Front Wheel, with expanding Brake, less Cable. Control Lever, Tyre & Tube 20 x 3.50 Tyre ..	4 6 3	..	..	WA60	..	..	..	..	..	..	..	..	✻	✻	✻	..	..
	Front Wheel, with expanding Brake, less Cable, Control Lever, Tyre & Tube 26 x 3 Tyre ..	4 3 3	..	WA100	..	..	..	..	✻	✻	✻	✻	✻	..	..	..	..	..
	Front Wheel, with expanding Brake, less Cable, Control Lever Tyre & Tube 25 x 3 Tyre ..	4 3 3	..	..	..	WA120	..	..	..	..	..	..	..	..	..	..	✻	..
	Wheel Rim only 19 x 2½ x 40	9 3	K628	..	G198-2	..	✻	✻	..	..	..	..	..	✻	✻	✻	..	O
	Wheel Rim only 20 x 2¼ x 40	9 3	..	H583-1	..	..	..	..	✻	✻	✻	✻	✻	..	..	..	..	O
	Wheel Rim only 19 x 2¼ x 40	9 3	..	..	..	F241	..	..	..	..	..	..	..	..	..	..	✻	O
N.I.	Wheel Spokes (Short) (Single Spoke 2d.) set 40 8¼ x 8/10G Butted	4 6	WA200	..	..	..	✻	✻	..	..	..	..	..	..	..	..	..	..
	Wheel Spokes (Short) (Single Spoke 2d.) set 20 6¾ x 11G	1 9	..	WA240	..	..	..	..	✻	✻	✻	✻	✻	..	..	..	..	..
	Wheel Spokes (Short) (Single Spoke 2d.) set 20 6 7/16 x 10G	1 9	..	..	WA200	..	..	..	..	..	..	..	..	✻	✻	✻	..	..
	Wheel Spokes (Short) (Single Spoke 2d.) set 20 6 13/16 x 11G	1 9	..	..	..	WA280	..	..	..	..	..	..	..	..	..	..	✻	..
	Wheel Spokes (Long) (Single Spoke 2d.) set 20 8 15/16 x 11G	1 9	..	WA320	..	..	..	..	✻	✻	✻	✻	✻	..	..	..	..	..
	Wheel Spokes (Long) (Single Spoke 2d.) set 20 8 7/16 x 10G	1 9	..	..	WA340	..	..	..	..	..	..	..	..	✻	✻	✻	..	..
	Wheel Spokes (Long) (Single Spoke 2d.) set 20 8 7/16 x 11G	1 9	..	..	..	WA300	..	..	..	..	..	..	..	..	..	..	✻	..
	Nipples for Spoke Wheels (Single Nipple 1d.) 10G set 40	2 0	WA360	..	WA360	..	✻	✻	..	..	..	..	..	✻	✻	✻	..	..
	Nipples for Spoke Wheels (Single Nipple 1d.) 11G set 40	2 0	..	WA350	..	WA380	..	..	✻	✻	✻	✻	✻	..	..	..	✻	..
	When ordering Wheels, Rims, Spokes or Nipples, the size of Rim and size and type of Tyre fitted must be stated always.																	
188	Hub complete, less Brake Parts and Solid Spindle	2 1 9	WA400	..	..	..	✻	✻	..	..	..	..	..	..	..	..	..	..
	Hub complete, less Brake Parts and Solid Spindle	2 2 0	..	WA420	..	..	..	..	✻	✻	✻	✻	✻	..	..	..	..	..
189	Hub complete, less Brake Parts and Solid Spindle	1 19 9	..	..	WA440	..	..	..	..	..	..	..	..	✻	✻	✻	..	..
	Hub complete, less Brake Parts and Solid Spindle	2 2 0	..	..	..	F245	..	..	..	..	..	..	..	..	..	..	✻	O
188	Hub Shell only	1 6 3	K632	..	..	..	✻	✻	..	..	..	..	..	..	..	..	..	O

This scan is explicit for non-commercial use and is not intended for financial or material gain by anyone

Wh. Ordering Quote Description and Part Number from Correct Column for your Horse Power and Model.

NO ✲ Indicates models for which Part is suitable.
Whe. ✲ occurs in more than one column in same line Part is interchang .e.

Illustration No.	DESCRIPTION OF PART.	Price. £ s. d.	PART NUMBER 9.96 h.p.	3.49 h.p.	4.98 h.p.	2.48 h.p.	MODELS M1 Twin	M2 Twin	M3 s.v.	M4 s.v.	M5 s.v.	M6 o.h.v.	M7 o.h.c.	M8 o.h.v.	M9 s.v.	M10 o.h.c.	M12 s.v.	For Dealer's Use
	Front Wheel—Continued.																	
	Hub Shell only	1 6 3	..	WA500	..	..	..	..	✲	✲	✲	✲	✲	..	..	..	..	.
189	Hub Shell only	1 6 3	..	..	WA520	..	..	..	..	..	..	..	..	✲	✲	✲	..	.
	Hub Shell only	1 6 3	..	..	..	F246	..	..	..	..	..	..	..	..	..	..	✲	O
190	Front Hub Fixed Cup (L.H. Thread) ..	2 9	K645	..	G204-1	..	✲	✲	..	..	..	..	..	✲	✲	✲	..	O
	Front Hub Fixed Cup (L H. Thread) ..	2 9	..	H599-1	..	F248	..	.	✲	✲	✲	✲	✲	..	..	..	✲	O
191	Lock Ring for Front Hub Fixed Cup .. 1¾ x 24 L.H. x 3/16 x 2⅛	1 3	K648	..	G207-1	..	✲	✲	..	..	..	..	..	✲	✲	✲	..	O
	Lock Ring for Front Hub Fixed Cup .. 1½ x 24 L.H. x 3/16 x 1-15/16	1 3	..	H602-1	..	F250	..	..	✲	✲	✲	✲	✲	..	..	..	✲	O
192	Front Hub Adjustable Cup (R.H. Thread) ..	2 9	K642	..	G205	..	✲	✲	..	..	.	..	..	✲	✲	✲	..	O
	Front Hub Adjustable Cup (R.H. Thread) .	2 9	..	H598	..	F247	..	..	✲	✲	✲	✲	✲	..	..	..	✲	O
191	Lock Ring for Front Hub Adjustable Cup .. 1¾ x 24 x 3/16 x 2⅛	1 3	K647	..	G207	..	✲	✲	..	..	..	..	..	✲	✲	✲	..	O
	Lock Ring for Front Hub Adjustable Cup .. 1½ x 24 x 3/16 x 1-15/16	1 3	..	H602	..	F249	..	..	✲	✲	✲	✲	✲	..	..	..	✲	O
	Felt Washer for Adjustable Cup	2	K643	..	G206	..	✲	✲	..	..	..	..	..	✲	✲	✲	..	O
	Felt Washer for Adjustable Cup	2	..	H603	..	F251	..	..	✲	✲	✲	✲	✲	..	..	..	✲	O
N.I.	Ball Bearings for Front Hub, 5/16 set 22 ..	1 3	K646	..	G201	..	✲	✲	..	..	..	..	..	✲	✲	✲	..	O
	Ball Bearings for Front Hub ¼ set 24 ..	1 3	..	H603	..	F253	..	..	✲	✲	✲	✲	✲	..	..	..	✲	O
	Front Hub Hollow Spindle	6 3	K634	..	..	..	✲	✲	..	..	..	..	..	..	..	..	..	O
193	Front Hub Hollow Spindle	5 9	..	H606-1	..	F252	..	..	✲	✲	✲	✲	✲	..	..	..	✲	O
	Front Hub Hollow Spindle	6 3	..	..	G202-1	..	..	..	..	..	..	..	..	✲	✲	✲	..	O
	Centre Spindle for Hollow Spindle ..	2 6	K635	..	..	..	✲	✲	..	..	..	..	..	..	..	..	..	O
194	Centre Spindle for Hollow Spindle ..	2 6	..	H612-1	..	F254	..	..	✲	✲	✲	✲	✲	..	..	..	✲	O
	Centre Spindle for Hollow Spindle ..	2 6	..	..	G202-2	..	..	..	..	..	..	..	..	✲	✲	✲	..	O
	Washer for Centre Spindle for Hollow Spindle ½ Plain	1	WA1020	..	G155-2	..	✲	✲	..	..	..	..	..	✲	✲	✲	..	O
N.I.	Washer for Centre Spindle for Hollow Spindle 7/16 Plain	1	..	H401	..	F119	..	..	✲	✲	✲	✲	✲	..	..	..	✲	O
	Nut for Centre Spindle .. .. 7/16 x 20 x 7/16 x 45/64	3	..	WA1060	..	WA1060	..	..	✲	✲	✲	✲	✲	..	..	..	✲	O
	Nut for Centre Spindle .. .. .. ½ x 24 x ½ x 45/64	7	..	..	WA1080	..	..	..	..	..	..	..	..	✲	✲	✲	..	.
195	Front Wheel Distance Piece	3	K653	..	..	..	✲	✲	..	..	..	..	..	..	..	..	..	O

This scan is explicit for non-commercial use and is not intended for financial or material gain by anyone

When Ordering Quote Description and Part Number from Correct Column for your Horse Power and Model.

NOT When ✻ Indicates models for which Part is suitable. ✻ occurs in more than one column in same line Part is interchange... e.

Illustration No.	DESCRIPTION OF PART.	Price. £ s. d.	PART NUMBER 9.96 h.p.	3.49 h.p.	4.98 h.p.	2.48 h.p.	M1 Twin	M2 Twin	M3 s.v.	M4 s.v.	M5 s.v.	M6 o.h.v.	M7 o.h.c.	M8 o.h.v.	M9 s.v.	M10 o.h.c.	M12 s.v.	For Dealer's Use
	Front Brake.																	
196	Front Wheel Brake Shoes, with Linings and Springs	11 6	WA1120	WA1120	WA1120	..	✻	✻	✻	✻	✻	✻	✻	✻	✻	✻	..	..
	Front Wheel Brake Shoes, with Linings and Springs	8 0	..	..	..	WA1140	..	..	..	..	..	..	..	..	..	..	✻	..
197	Top Front Brake Shoe only, with Lining ..	5 9	WA1160	WA1160	WA1160	..	✻	✻	✻	✻	✻	✻	✻	✻	✻	✻	..	..
	Top Front Brake Shoe only, with Lining ..	4 0	..	..	..	WA1180	..	..	..	..	..	..	..	..	..	..	✻	..
198	Bottom Front Brake Shoe only, with Lining ..	5 9	WA1200	WA1200	WA1200	..	✻	✻	✻	✻	✻	✻	✻	✻	✻	✻	..	..
	Bottom Front Brake Shoe only, with Lining ..	4 0	..	..	..	WA1220	..	..	..	..	..	..	..	..	..	..	✻	..
199	Front Brake Linings, with Rivets .. pair..	4 0	WA1240	WA1240	WA1240	..	✻	✻	✻	✻	✻	✻	✻	✻	✻	✻	..	..
	Front Brake Linings, with Rivets .. pair..	3 3	..	..	..	WA1260	..	..	..	..	..	..	..	..	..	.	✻	..
N.I.	Rivets only for Brake Linings .. set 8..	4	WA1280	WA1280	WA1280	WA1280	✻	✻	✻	✻	✻	✻	✻	✻	✻	✻	✻	..
200	Springs for Front Brake Shoes .. each..	2	K703	H650	G218	F27	✻	✻	✻	✻	✻	✻	✻	✻	✻	✻	✻	O
201	Anchor Plate for Front Brake	11 3	WA1320	..	..	..	✻	✻	..	..	..	..	..	..	..	..	..	..
	Anchor Plate for Front Brake	10 6	..	WA1340	..	..	..	..	✻	✻	✻	✻	✻	..	..	..	..	..
	Anchor Plate for Front Brake	11 9	..	..	WA1360	..	..	..	..	..	..	..	..	✻	✻	✻	..	..
	Anchor Plate for Front Brake	10 6	..	..	..	WA1380	..	..	..	..	..	..	..	..	..	..	✻	..
202	Bolt for Anchor Plate for Front Brake 7/16 x 1-7/32 x 26 ..	4	..	..	..	F277	..	..	..	..	..	..	..	..	..	..	✻	O
	Bolt for Anchor Plate for Front Brake 7/16 x 1⅞ x 26 ..	4	K699	H652	G216	..	✻	✻	✻	✻	✻	✻	✻	✻	✻	✻	..	O
	Locknut for Front Anchor Plate .. .. ⅜ x 24 x 11/32 x 1	3	K696	..	..	..	✻	✻	..	..	..	..	..	..	..	..	..	O
	Locknut for Front Anchor Plate .. .. 7/16 x 20 x 7/16 x 45/64	3	..	H611-1	..	F257	..	..	✻	✻	✻	✻	✻	..	..	..	✻	O
	Locknut for Front Anchor Plate .. .. ¼ x 24 x 5/16 x 13/16	3	..	..	WA1500	..	..	..	..	..	..	..	..	✻	✻	✻	..	..
	Washer for Front Anchor Plate Bolt 7/16 Single Spring ..	1	WA1520	WA1520	WA1520	WA1520	✻	✻	✻	✻	✻	✻	✻	✻	✻	✻	✻	..
	Front Hub Brake Drum, with Centre ..	16 0	K686	..	..	..	✻	✻	..	..	..	..	..	..	..	..	..	O
N.I.	Front Hub Brake Drum Centre only ..	1 9	K688	..	..	..	✻	✻	..	..	..	..	..	..	..	..	..	O
	Pins for retaining Brake Drum Centre 3/16 x ½ x 24 ..	1	K429	..	..	..	✻	✻	..	..	..	..	..	..	..	..	..	O
	Front Dummy Spindle only	2 3	K695	..	..	..	✻	✻	..	..	..	..	..	..	..	..	..	O
	Washer for Front Dummy Spindle ½ Plain ..	1	WA1020	..	..	..	✻	✻	..	..	..	..	..	..	..	..	..	..
	Locknut for Front Spindle (Blind) .. ½ x 24 x 1-17/32 x 53/64	3	K697	..	..	..	✻	✻	..	..	..	..	..	..	..	..	..	O

NOT ✱ Indicates models for which Part is suitable.
When ✱ occurs in more than one column in same line Part is interchange

MODELS										For Dealer's Use
M2 Twin	M3 s.v.	M4 s.v.	M5 s.v.	M6 o.h.v.	M7 o.h.c.	M8 o.h.v.	M9 s.v.	M10 o.h.c.	M12 s.v.	
✱	..	..	..	..	..	..	..	..	..	O
✱	✱	✱	✱	✱	✱	✱	✱	✱	✱	O
✱	✱	✱	✱	✱	✱	✱	✱	✱	✱	O
✱	✱	✱	✱	✱	✱	✱	✱	✱	✱	O
✱	✱	✱	✱	✱	✱	✱	✱	✱	..	O
✱	✱	✱	✱	✱	✱	✱	✱	✱	✱	O
✱	..	..	..	..	..	..	..	..	..	O
✱	..	..	..	..	..	..	..	..	..	O
✱	✱	✱	✱	✱	✱	✱	✱	✱	✱	..
✱	✱	✱	✱	✱	✱	✱	✱	✱	✱	..
✱	✱	✱	✱	✱	✱	✱	✱	✱	✱	..
✱	✱	✱	✱	✱	✱	✱	✱	✱	✱	..
✱	✱	✱	✱	✱	✱	✱	✱	✱	✱	..
✱	✱	✱	✱	✱	✱	✱	✱	✱	✱	..
✱	✱	✱	✱	✱	✱	✱	✱	✱	✱	..
✱	✱	✱	✱	✱	✱	✱	✱	✱	✱	..
✱	✱	✱	✱	✱	✱	✱	✱	✱	✱	..
✱	✱	✱	✱	✱	✱	✱	✱	✱	✱	..
✱	✱	✱	✱	✱	✱	✱	✱	✱	✱	..
✱	✱	✱	✱	✱	✱	✱	✱	✱	✱	..
✱	✱	✱	✱	✱	✱	✱	✱	✱	✱	..

This scan is explicit for non-commercial use and is not intended for financial or material gain by anyone

When Ordering Quote Description and Part Number from Correct Column for your Horse Power and Model.

Rear Wheel.

Illustration No.	DESCRIPTION OF PART.	Price. £ s. d.	PART NUMBER 9.96 h.p.	3.49 h.p.	4.98 h.p.	2.48 h.p.
N.I.	Rear Wheel complete, less Sprocket and Tyre 26 x 3.50 Tyre	2 14 0	WA2180	..	WA2180	..
	Rear Wheel complete, less Sprocket and Trye 26 x 3 Tyre	2 14 0	..	WA2220	..	..
	Rear Wheel complete, less Sprocket and Tyre 25 x 3 Tyre	2 15 6	..	..	..	WA2240
	Rear Wheel Rim only (as front) 19 x 2½ x 40	9 3	K628	..	G198-2	..
	Rear Wheel Rim only (as front) 20 x 2¼ x 40	9 3	..	H583-1	..	..
	Rear Wheel Rim only (as front) 19 x 2¼ x 40	9 3	..	..	..	F241
	Wheel Spokes (Single Spoke 2d.) set 40 8¼ x 8 10G (Butted)	4 6	WA200	..	WA200	..
	Wheel Spokes (Single Spoke 2d.) set 40.. 8-11/16 x 10G	3 6	..	WA2340	..	..
	Wheel Spokes (Single Spoke 2d.) set 40.. 8-3/16 x 10G	3 6	..	..	..	WA2320
	Nipples for Wheel Spokes (Single Nipple 1d.) 10G set 40	2 0	WA360	WA360	WA360	WA360
	When ordering Wheels, Rims, Spokes or Nipples, the size of Rim and size and type of Tyre fitted must be stated always.					
188	Hub complete, less Brake Parts and Solid Spindle	2 1 9	WA400	.	WA400	..
	Hub complete, less Brake Parts and Solid Spindle	2 1 3	..	WA2360	..	..
	Hub complete, less Brake Parts and Solid Spindle	2 2 9	..	..	..	WA2460
	Hub Shell only	1 6 3	K632	..	WA2380	..
	Hub Shell only	1 6 3	..	H684-1	..	..
	Hub Shell only	1 6 3	..	..	..	F294
190	Rear Hub Fixed Cup (as front) (L.H. Thread)	2 9	K645	..	G204-1	..
	Rear Hub Fixed Cup (as front) (L.H. Thread)	2 9	..	H599-1	..	F248
191	Lockring for Rear Hub Fixed Cup.. .. 1¼ x 24 L.H. x 3/16 x 2¼ (as front)	1 3	K648	..	G207-1	..
	Lockring for Rear Hub Fixed Cup.. .. 1½ x 24 L.H. x 3/16 x 1-15/16 (as front)	1 3	..	H602-1	..	F250
192	Rear Hub Adjusting Cup (as front) .. (R.H.Thread)	2 9	K642	..	G205	..
	Rear Hub Adjusting Cup (as front) .. (R.H.Thread)	2 9	..	H598	..	F247
191	Lockring for Rear Hub Adjusting Cup .. (as front) 1¼ x 24 x 3/16 x 2¼	1 3	K647	..	G207	..
	Lockring for Rear Hub Adjusting Cup .. (as front) 1½ x 24 x 3/16 x 1-15/16	1 3	..	H602	..	F249

NOTE ✱ Indicates models for which Part is suitable.
When ✱ occurs in more than one column in same line Part is interchangeable.

MODELS M1 Twin	M2 Twin	M3 s.v.	M4 s.v.	M5 s.v.	M6 o.h.v.	M7 o.h.c.	M8 o.h.v.	M9 s.v.	M10 o.h.c.	M12 s.v.	For Dealer's Use.
✱	✱	..	..	..	..	..	✱	✱	✱	..	..
..	..	✱	✱	✱	✱	✱	..	..	..	..	..
..	..	..	..	..	..	..	..	..	..	✱	..
✱	✱	..	..	..	..	..	✱	✱	✱	..	O
..	..	✱	✱	✱	✱	✱	..	..	..	..	O
..	..	..	..	..	.	..	..	..	..	✱	O
✱	✱	..	..	..	..	..	✱	✱	✱	..	..
..	..	✱	✱	✱	✱	✱	..	..	..	..	..
..	..	..	..	..	..	..	..	..	..	✱	..
✱	✱	✱	✱	✱	✱	✱	✱	✱	✱	✱	..
✱	✱	..	..	..	..	..	✱	✱	✱	..	..
..	..	✱	✱	✱	✱	✱	..	..	..	..	..
..	..	..	..	..	..	..	..	..	..	✱	..
✱	✱	..	..	..	..	.	✱	✱	✱	..	O
..	..	✱	✱	✱	✱	✱	..	..	..	..	O
..	..	..	..	..	..	..	..	..	..	✱	O
✱	✱	..	..	..	..	..	✱	✱	✱	..	O
..	..	✱	✱	✱	✱	✱	..	..	..	✱	O
✱	✱	..	..	..	..	..	✱	✱	✱	..	O
..	..	✱	✱	✱	✱	✱	..	.	..	✱	O
✱	✱	..	..	..	..	..	✱	✱	✱	..	O
..	..	✱	✱	✱	✱	✱	..	..	..	✱	O
✱	✱	..	..	..	..	..	✱	✱	✱	..	O
..	..	✱	✱	✱	✱	✱	..	..	..	✱	O

This scan is explicit for non-commercial use and is not intended for financial or material gain by anyone

When ordering Quote Description and Part Number from Correct Column for your Horse Power and Model.

NOT ✻ Indicates models for which Part is suitable.
When ✻ occurs in more than one column in same line Part is interchangeable.

START OF PART TWO

Illustration No.	DESCRIPTION OF PART.	Price. £ s. d.	PART NUMBER 9.96 h.p.	3.49 h.p.	4.98 h.p.	2.48 h.p.	MODELS M1 Twin	M2 Twin	M3 s.v.	M4 s.v.	M5 s.v.	M6 o.h.v.	M7 o.h.c.	M8 o.h.v.	M9 s.v.	M10 o.h.c.	M12 s.v.	For Dealer's Use
	Rear Wheel—Continued.																	
	Felt Washer for Adjusting Cup (as front) ..	2	K643	..	G206	..	✻	✻	..	..	..	..	..	✻	✻	✻	..	O
N.I.	Felt Washer for Adjusting Cup (as front) ..	2	..	H603	..	F251	..	..	✻	✻	✻	✻	✻	..	..	..	✻	O
	Ball Bearings for Rear Cup (as front) 5/16 set 22	1 3	K646	..	G201	..	✻	✻	..	..	..	..	..	✻	✻	✻	..	O
	Ball Bearings for Rear Cup (as front) ¼ set 24	1 3	..	H608	..	F253	..	..	✻	✻	✻	✻	✻	..	..	..	✻	O
193	Rear Hub Hollow Spindle (as front for M1, M2)	6 3	K634	..	G228	..	✻	✻	..	..	..	..	..	✻	✻	✻	..	O
	Rear Hub Hollow Spindle	6 0	..	H691	..	..	..	..	✻	✻	✻	✻	✻	..	..	..	..	O
194	Centre Spindle for Hollow Spindle (as front for M1 & M2) ..	2 6	K635	..	G227	..	✻	✻	..	..	..	..	..	✻	✻	✻	..	O
	Centre Spindle for Hollow Spindle ..	2 6	..	H696	..	..	..	..	✻	✻	✻	✻	✻	..	..	..	..	O
207	Rear Solid Spindle	7 6	..	..	..	F300	..	..	..	..	..	.	..	..	..	..	✻	O
208	Cones for Rear Solid Spindle each..	2 0	..	..	..	F300-1	..	..	..	..	..	..	..	..	..	..	✻	O
N.I.	Washer for Centre Spindle for Hollow Spindle ½ Plain ..	1	WA1020	..	G155-2	..	✻	✻	..	..	..	..	..	✻	✻	✻	..	O
	Washer for Centre Spindle for Hollow Spindle 7/16 Plain ..	1	..	H401	..	F119	..	..	✻	✻	✻	✻	✻	..	..	..	✻	O
	Nut for Centre Spindle ½ x 24 x 1-17/32 x 53/64 (Blind)	3	K697	..	G220	..	✻	✻	..	..	..	..	..	✻	✻	✻	..	O
209	Nut for Centre Spindle 7/16 x 26 x ¾ x 45/64	3	..	YA520	..	..	..	..	✻	✻	✻	✻	✻	..	..	..	..	..
	Nut for Centre Spindle 7/16 x 20 x 7/16 x 45/64	3	..	..	..	WA1060	..	..	..	..	..	..	..	..	..	..	✻	O
195	Rear Wheel Distance Piece (short) ..	3	K654	..	G247	..	✻	✻	..	..	..	..	..	✻	✻	✻	..	O
	Rear Wheel Distance Piece (outside Shaped)	4	K655	..	G248	..	✻	✻	..	..	..	..	..	✻	✻	✻	..	O
210	Rear Wheel Distance Piece	3	..	H740	..	..	..	..	✻	✻	✻	✻	✻	..	..	..	..	O
	Rear Wheel Distance Piece (Long) ..	3	..	..	..	F301	..	..	..	..	..	..	..	..	..	..	✻	O
	Rear Wheel Distance Piece (short) ..	3	..	..	..	F302	..	..	..	..	..	..	..	..	..	..	✻	O
206	Hub Sleeve Bolt (as front for M1, 2) ..	2 9	K657	..	G250	..	✻	✻	..	..	..	..	..	✻	✻	..	..	O
	Hub Sleeve Bolt	2 3	..	H713	..	..	..	..	✻	✻	✻	✻	..	..	..	..	..	O

This scan is explicit for non-commercial use and is not intended for financial or material gain by anyone

When Ordering Quote Description and Part Number from Correct Column for your Horse Power and Model.

NOTE ✱ Indicates models for which Part is suitable.
When ✱ occurs in more than one column in same line Part is interchangeable.

Illustration No.	DESCRIPTION OF PART.	Price. £ s. d.	PART NUMBER 9.96 h.p.	3.49 h.p.	4.98 h.p.	2.48 h.p.	MODELS M1 Twin	M2 Twin	M3 s.v.	M4 s.v.	M5 s.v.	M6 o.h.v.	M7 o.h.c.	M8 o.h.v.	M9 s.v.	M10 o.h.c.	M12 s.v.	For Dealer's Use.
	Rear Brake.																	
	Rear Brake Drum Sprocket, with Centre fitted	1 16 9	K722	..	G240-A	..	✱	✱	..	..	..	..	..	✱	✱	..	..	O
	Rear Brake Drum Sprocket	1 17 3	..	..	G241-1	..	..	..	..	..	..	..	..	..	..	✱	..	O
211	Rear Brake Drum Sprocket, with Centre fitted	1 11 3	..	H701-1	..	..	..	..	✱	✱	✱	✱	..	..	..	..	..	O
	Rear Brake Drum Sprocket	1 8 9	..	H705-1	..	..	..	..	..	..	..	..	✱	..	..	..	..	O
	Rear Brake Drum Sprocket	1 4 3	..	..	..	F310	..	..	..	..	..	..	..	..	..	..	✱	O
214	Plain Driving Stud	2	K694	..	G244	..	✱	✱	..	..	..	..	..	✱	✱	✱	..	O
	Plain Driving Stud	2	..	H710	..	..	..	..	✱	✱	✱	✱	✱	..	..	..	..	O
	Screwed Driving Stud	4	K727	..	G243	..	✱	✱	..	..	..	..	..	✱	✱	..	..	O
	Screwed Driving Bolt	4	..	..	G243-2	..	..	..	..	..	..	..	..	..	..	✱	..	O
205	Screwed Driving Stud	4	.	H711	..	..	..	..	✱	✱	✱	✱	..	..	..	..	..	O
	Screwed Driving Bolt	4	..	WA2400	..	..	..	..	..	..	..	..	✱	..	..	..	..	..
	Screwed Driving Bolt	4	..	..	..	F326	..	..	..	..	..	..	..	..	..	..	✱	O
	Washer for Screwed Driving Bolt ⅜ Single Spring ..	1	..	H160	..	..	..	..	..	..	..	..	✱	..	..	..	..	O
	Washer for Screwed Driving Bolt 7/16 Single Spring ..	1	..	..	WA1520	..	..	..	..	..	..	..	..	..	..	✱	..	O
N.I.	Nut for Screwed Driving Bolt ⅜ x 26 x ¼ x 39/64	2	..	H290	..	..	..	..	..	..	..	..	✱	..	..	..	..	O
	Nut for Screwed Driving Bolt 7/16 x 26 x 17/64 x 45/64	2	..	..	G254-2	..	..	..	..	..	..	..	..	..	..	✱	..	O
	Nut for Screwed Driving Bolt 5/16 x 20 x 3/16 x 17/32	2	..	..	..	F76	..	..	..	..	..	..	..	..	..	..	✱	O
212	Rear Brake Drum Centre only ..	1 9	K688	..	G242-1	..	✱	✱	..	..	..	..	..	✱	✱	..	..	O
	Rear Brake Drum Centre only ..	1 6	..	H708-1	..	..	..	..	✱	✱	✱	✱	..	..	..	..	..	O
N.I.	Pins for retaining Brake Drum Centres 3/16 x ½ x 24 ..	1	K429	H413	G121-1	..	✱	✱	✱	✱	✱	✱	..	✱	✱	..	..	O
	Rear Brake Shoes, with Linings (per pair) ..	12 9	WA2600	..	WA2600	..	✱	✱	..	..	..	..	..	✱	✱	✱	..	..
196	Rear Brake Shoes, with Linings (per pair) ..	9 3	..	WA2620	..	..	..	..	✱	✱	✱	✱	✱	..	..	..	..	..
	Rear Brake Shoes, with Linings (per pair) ..	8 0	..	..	..	WA2640	..	..	..	..	..	..	..	..	..	..	✱	..
	Top Rear Brake Shoe, with Lining ..	6 3	WA2660	..	WA2660	..	✱	✱	..	..	..	..	..	✱	✱	✱	..	..
197	Top Rear Brake Shoe, with Lining ..	4 6	..	WA2680	..	..	..	..	✱	✱	✱	✱	✱	..	..	..	..	..
	Top Rear Brake Shoe, with Lining ..	4 0	..	..	..	WA2700	..	..	..	..	..	..	..	..	..	..	✱	..

This scan is explicit for non-commercial use and is not intended for financial or material gain by anyone

When Ordering Quote Description and Part Number from Correct Column for your Horse Power and Model.

NOT When ✱ Indicates models for which Part is suitable. ✱ occurs in more than one column in same line Part is interchangeable.

Illustration No.	DESCRIPTION OF PART.	Price. £ s. d.	PART NUMBER 9.96 h.p.	3.49 h.p.	4.98 h.p.	2.48 h.p.	MODELS M1 Twin	M2 Twin	M3 s.v.	M4 s.v.	M5 s.v.	M6 o.h.v.	M7 o.h.c.	M8 o.h.v.	M9 s.v.	M10 o.h.c.	M12 s.v.	For Dealer's Use
	Rear Brake—Continued.																	
198	Bottom Rear Brake Shoe, with Lining ..	6 3	WA2720	..	WA2720	..	✱	✱	..	..	..	..	..	✱	✱	✱	..	..
	Bottom Rear Brake Shoe, with Lining ..	4 6	..	WA2740	..	..	..	..	✱	✱	✱	✱	✱	..	..	..	..	..
	Bottom Rear Brake Shoe, with Lining ..	4 0	..	..	..	WA2760	..	..	..	..	..	..	..	..	..	..	✱	..
199	Brake Lining, with Rivets per pair..	5 6	WA2780	..	WA2780	..	✱	✱	..	..	..	..	..	✱	✱	✱	..	..
	Brake Lining, with Rivets per pair..	4 0	..	WA2800	..	..	..	..	✱	✱	✱	✱	✱	..	..	..	..	..
	Brake Lining, with Rivets per pair..	3 3	..	..	..	WA2820	..	..	..	..	..	..	..	..	..	..	✱	..
N.I.	Rivets for Brake Linings .. set 8..	4	WA2840	WA2840	WA2840	WA2840	✱	✱	✱	✱	✱	✱	✱	✱	✱	✱	✱	..
200	Springs for Rear Brake Shoes	2	K703	..	G218	..	✱	✱	..	..	..	..	..	✱	✱	✱	..	O
	Springs for Rear Brake Shoes	2	..	H650	..	F275	..	..	✱	✱	✱	✱	✱	..	..	..	✱	O
201	Rear Brake Anchor Plate	13 0	WA2920	..	WA2920	..	✱	✱	..	..	..	..	..	✱	✱	✱	..	..
	Rear Brake Anchor Plate	11 6	..	WA2940	..	..	..	..	✱	✱	✱	✱	✱	..	..	..	..	..
	Rear Brake Anchor Plate	12 3	..	..	..	WA2980	..	..	..	..	..	..	..	..	..	..	✱	..
202	Bolt for Rear Brake Anchor Plate ½ x 1¾ x 24	7	K740	.	G239	..	✱	✱	..	..	..	..	..	✱	✱	✱	..	O
	Bolt for Rear Brake Anchor Plate 7/16 x 1-5/16 x 26 ..	4	..	H652-1	..	..	..	..	✱	✱	✱	✱	✱	..	..	..	..	O
N.I.	Locknut for Rear Brake Anchor Plate ½ x 24 x ¾ x 13/16 ..	3	K729	..	G246	..	✱	✱	..	..	..	..	..	✱	✱	✱	..	O
	Locknut for Rear Brake Anchor Plate 7/16 x 26 x 21/64 x 13/16 .	1	..	H718	..	..	..	..	✱	✱	✱	✱	✱	..	..	..	..	O
	Locknut for Rear Brake Anchor Plate 7/16 x 20 x 21/64 x 45/64 ..	1	..	..	..	F76	..	..	..	..	..	..	..	..	..	..	✱	O
	Clip on Chainstay for Anchor Plate .	3	..	..	..	F319	..	..	..	..	..	..	..	..	..	..	✱	O
	Pin for Chainstay for Anchor Plate 5/16 x ⅞ x 20	4	..	..	..	F320	..	..	..	..	..	..	..	..	..	..	✱	O
	Nut for Chainstay for Anchor Plate 5/16 x 20 x ¾ x 19/32 ..	1	..	..	..	ZA6020	..	..	..	..	..	..	..	..	..	..	✱	O
203	Rear Brake Expander Spindle	3 6	K742	..	G235	..	✱	✱	..	..	..	..	..	✱	✱	✱	..	O
	Rear Brake Expander Spindle	2 9	..	H731	..	F278	..	..	✱	✱	✱	✱	✱	..	..	..	✱	O
N.I.	Washer for Rear Brake Expander Spindle .. ⅜ plain	1	WA3200	..	WA3200	..	✱	✱	..	..	..	..	..	✱	✱	✱	..	O
	Washer for Rear Brake Expander Spindle .. 5/16 plain	1	..	ZA6830	..	ZA6830	..	..	✱	✱	✱	✱	✱	..	..	..	✱	O

This scan is explicit for non-commercial use and is not intended for financial or material gain by anyone

When Ordering Quote Description and Part Number from Correct Column for your Horse Power and Model.

Illustration No.	DESCRIPTION OF PART.	Price. £ s. d.	PART NUMBER 9.96 h.p.	3.49 h.p.	4.98 h.p.	2.48 h.p.
	Rear Brake—Continued.					
N.I.	Nut for Rear Brake Expander Spindle 3/8 x 26 x 3/8 x 9/16 ..	2	K32	..	G2-7	..
N.I.	Nut for Rear Brake Expander Spindle 5/16 x 20 x 1/4 x 19/32 ..	1	..	H320	..	ZA6020
204	Lever for Expander Spindle	2 6	K746	..	G236	..
204	Lever for Expander Spindle	2 3	..	H735	..	..
204	Lever for Expander Spindle	2 3	..	..	..	F324
213	Return Spring for Expander Spindle ..	4	..	H736	..	F325
213	Return Spring for Expander Spindle ..	4	..	.	G240	..
215	Rear Dummy Spindle	1 9	K728	..	G245	..
215	Rear Dummy Spindle	1 6	..	H717	..	..

NO. ✲ Indicates models for which Part is suitable.
When ✲ occurs in more than one column in same line Part is interchangeable.

MODELS M1 Twin	M2 Twin	M3 s.v.	M4 s.v.	M5 s.v.	M6 o.h.v.	M7 o.h.c.	M8 o.h.v.	M9 s.v.	M10 o.h.c.	M12 s.v.	For Dealer's Use.
✲	✲	..	..	..	..	..	✲	✲	✲	..	O
..	..	✲	✲	✲	✲	✲	..	..	..	✲	O
✲	✲	..	..	..	..	..	✲	✲	✲	..	O
..	..	✲	✲	✲	✲	✲	..	..	..	..	O
..	..	..	..	..	..	..	..	..	..	✲	O
..	..	✲	✲	✲	✲	✲	..	..	..	✲	O
..	..	..	..	..	..	..	✲	✲	✲	..	O
✲	✲	..	..	..	..	..	✲	✲	✲	..	O
..	..	✲	✲	✲	✲	✲	..	..	..	..	O

This scan is explicit for non-commercial use and is not intended for financial or material gain by anyone

When Ordering Quote Description and Part Number from Correct Column for your Horse Power and Model.

NOT ✻ Indicates models for which Part is suitable.
When ✻ occurs in more than one column in same line Part is interchangeable.

Illustration No.	DESCRIPTION OF PART.	Price. £ s. d.	PART NUMBER 9.96 h.p.	3.49 h.p.	4.98 h.p.	2.48 h.p.	M1 Twin	M2 Twin	M3 s.v.	M4 s.v.	M5 s.v.	M6 o.h.v.	M7 o.h.c.	M8 o.h.v.	M9 s.v.	M10 o.h.c.	M12 s.v.	For Dealer's Use.
	Spring Forks.																	
	NOTE—"Forks complete" does not include Steering Damper. If required this must be ordered separately.																	
216	Spring Forks complete, less Steering Damper	6 12 3	RA1	..	..	..	✻	✻	..	..	..	..	..	..	..	..	..	..
	Spring Forks complete, less Steering Damper	4 17 9	..	RA20	..	..	..	..	✻	✻	✻	✻	✻	..	..	..	..	..
	Spring Forks complete, less Steering Damper	5 9 3	..	..	RA40	..	..	..	..	..	..	..	..	✻	✻	✻	..	.
	Spring Forks complete, less Steering Damper	4 6 3	..	..	..	RA60	..	..	..	..	..	..	..	..	..	..	✻	..
217	Spring Fork Girder only..	4 0 0	RA80	..	..	..	✻	✻	..	..	..	..	..	..	..	..	..	..
	Spring Fork Girder only..	3 0 0	..	RA100	..	..	..	..	✻	✻	✻	✻	✻	..	..	..	..	..
	Spring Fork Girder only..	3 9 0	..	..	RA120	..	..	..	..	..	..	..	..	✻	✻	✻	..	..
	Spring Fork Girder only..	2 12 0	..	..	..	RA140	..	..	..	..	..	..	..	..	..	..	✻	..
218	Steering Crown and Column	16 9	RA160	..	..	..	✻	✻	..	..	..	..	..	..	..	..	..	..
	Steering Crown and Column	14 6	..	RA180	..	..	..	..	✻	✻	✻	✻	✻	..	..	..	..	..
	Steering Crown and Column	15 6	..	..	RA200	..	..	..	..	..	..	..	..	✻	✻	✻	..	..
	Steering Crown and Column	14 3	..	..	..	RA220	..	..	..	..	..	..	..	..	..	..	✻	..
219	Clip for Steering Crown and Column ..	9 6	RA240	..	..	..	✻	✻	..	..	..	..	..	..	..	..	..	..
	Clip for Steering Crown and Column ..	8 6	..	RA260	..	..	..	..	✻	✻	✻	✻	✻	..	..	..	..	..
	Clip for Steering Crown and Column ..	9 6	..	..	RA280	..	..	..	..	..	..	..	..	✻	✻	✻	..	..
	Clip for Steering Crown and Column ..	8 6	..	..	..	RA300	..	..	..	..	..	..	..	..	..	..	✻	..
220	Pin for Clip for Steering Crown and Column.. 7/16 x 2-1/16 x 20	4	K839	..	..	..	✻	✻	..	..	..	..	..	..	..	..	..	O
	Pin for Clip for Steering Crown and Column.. ⅜ x 1-15/16 x 20 (plated)	4	..	H814	G322	F365	..	..	✻	✻	✻	✻	✻	✻	✻	✻	✻	O
N.I.	Nut for Clip for Steering Crown and Column.. (Plated) 7/16 x 20 x ⅛ x 45/64	2	RA360	..	..	..	✻	✻	..	..	..	..	..	..	..	..	..	O
	Nut for Clip for Steering Crown and Column.. (Plated) ⅜ x 20 x ⅜ x 39/64	2	..	RA380	RA380	RA380	..	..	✻	✻	✻	✻	✻	✻	✻	✻	✻	O
221	Locknut for Steering Crown and Column .. (Plated) 1½ x 26 x 13/32 x 1½	1 3	RA400	RA400	RA400	..	✻	✻	✻	✻	..	✻	✻	✻	✻	✻	..	..
	Locknut for Steering Crown and Column .. (Plated) 1½ x 26 x ⅜ x 1-7/16	1 3	..	H775	..	..	..	..	..	..	✻	..	..	..	..	..	..	O
	Locknut for Steering Crown and Column .. (Plated) 1-1/16 x 26 x ¾ x 1⅜	1 3	..	..	..	F353	..	..	..	..	..	..	..	..	..	..	✻	O
N.I.	Steering Damper complete	10 0	RA460	..	..	..	✻	✻	..	..	..	..	..	..	..	..	..	..
	Steering Damper complete	10 0	..	RA480	RA480	..	..	..	✻	✻	..	✻	✻	✻	✻	✻	..	..

This scan is explicit for non-commercial use and is not intended for financial or material gain by anyone

When Ordering Quote Description and Part Number from Correct Column for your Horse Power and Model.

NOT ✻ Indicates models for which Part is suitable.
When ✻ occurs in more than one column in same line Part is interchangeable.

Illustration No.	DESCRIPTION OF PART.	Price. £ s. d.	PART NUMBER 9.96 h.p.	3.49 h.p.	4.98 h.p.	2.48 h.p.	MODELS M1 Twin	M2 Twin	M3 s.v.	M4 s.v.	M5 s.v.	M6 o.h.v.	M7 o.h.c.	M8 o.h.v.	M9 s.v.	M10 o.h.c.	M12 s.v.	For Dealer's Use.
	Spring Forks—Continued.																	
222	Steering Damper Knob only	4 0	RA500	..	..	..	✻	✻	..	..	..	..	..	..	..	..	..	..
	Steering Damper Knob only	4 0	..	RA520	RA520	..	..	..	✻	✻	..	✻	✻	✻	✻	✻	..	..
223	Steering Damper Drawbolt, 7-3/16 (long) ..	1 6	RA540	..	..	..	✻	✻	..	..	..	..	..	..	..	..	..	..
	Steering Damper Drawbolt, 6-5/16 (long) ..	1 6	..	RA560	RA560	..	..	..	✻	✻	..	✻	✻	✻	✻	✻	..	..
N.I.	Steering Damper Distance Piece	3	RA580	RA580	RA580	..	✻	✻	✻	✻	.	✻	✻	✻	✻	✻	..	..
	Steering Damper Spring..	1 3	RA600	..	..	..	✻	✻	..	..	..	..	..	..	..	..	..	..
	Steering Damper Spring..	1 3	..	RA610	RA610	..	..	..	✻	✻	..	✻	✻	✻	✻	✻	..	..
224	Steering Damper Shoes .. .. each	6	RA620	RA620	RA620	..	✻	✻	✻	✻	..	✻	✻	✻	✻	✻	..	..
225	Steering Damper Plug	1 3	RA680	..	..	..	✻	✻	..	..	..	..	..	..	..	..	..	.
	Steering Damper Plug	1 3	..	RA700	RA700	..	..	..	✻	✻	..	✻	✻	✻	✻	✻	..	..
N.I.	Steering Damper Washer 5/16 Plain ..	1	ZA6830	ZA6830	ZA6830	..	✻	✻	✻	✻	..	✻	✻	✻	✻	✻	..	O
	Steering Damper Washer ⅜ Double Spring ..	1	RA740	RA740	RA740	..	✻	✻	✻	✻	..	✻	✻	✻	✻	✻	..	O
	Steering Damper Locknut 5/16 x 26 x 9/32 x 17/32	1	ZA7160	H177	G55-3	..	✻	✻	✻	✻	..	✻	✻	✻	✻	✻	..	O
	Steering Damper Fibre Washer	3	RA780	RA780	RA780	..	✻	✻	✻	✻	..	✻	✻	✻	✻	✻	..	..
	Steering Damper Steel Washer	2	RA800	RA800	RA800	..	✻	✻	✻	✻	..	✻	✻	✻	✻	✻	..	..
226	Top Fork Link (Plain)	1 9	K828	..	..	..	✻	✻	..	..	..	..	..	..	..	..	..	O
	Top Fork Link (Plain)	1 6	..	RA860	RA860	..	..	..	✻	✻	✻	✻	✻	✻	✻	✻	..	..
	Top Fork Link (Plain)	1 3	..	..	..	F357	..	..	..	..	..	..	..	..	..	..	✻	O
227	Top Fork Link (Tapped)	1 9	K829	..	..	..	✻	✻	..	..	..	..	..	..	..	..	..	O
	Top Fork Link (Tapped)	1 6	..	RA920	RA920	..	..	..	✻	✻	✻	✻	✻	✻	✻	✻	..	..
	Top Fork Link (Tapped)	1 3	..	..	..	F358	..	..	..	..	..	..	..	..	..	..	✻	O
228	Bottom Fork Link (Plain)	2 9	K830	..	..	..	✻	✻	..	..	..	..	..	..	..	..	..	O
	Bottom Fork Link (Plain)	1 9	..	RA980	RA980	..	..	..	✻	✻	✻	✻	✻	✻	✻	✻	..	..
	Bottom Fork Link (Plain)	1 3	..	..	..	F359	..	..	..	..	..	..	..	..	..	..	✻	O
229	Bottom Fork Link (Tapped)	2 9	K831	..	..	..	✻	✻	..	..	..	..	..	..	..	..	..	O
	Bottom Fork Link (Tapped)	1 9	..	RA1040	RA1040	..	..	..	✻	✻	✻	✻	✻	✻	✻	✻	..	..

This scan is explicit for non-commercial use and is not intended for financial or material gain by anyone

When Ordering Quote Description and Part Number from Correct Column for your Horse Power and Model.

NOTE When ✻ Indicates models for which Part is suitable. occurs in more than one column in same line Part is interchangeable.

Illustration No.	DESCRIPTION OF PART.	Price. £ s. d.	PART NUMBER 9.96 h.p.	3.49 h.p.	4.98 h.p.	2.48 h.p.	MODELS M1 Twin	M2 Twin	M3 s.v.	M4 s.v.	M5 s.v.	M6 o.h.v.	M7 o.h.c.	M8 o.h.v.	M9 s.v.	M10 o.h.c.	M12 s.v.	For Dealer's Use.
	Spring Forks —Continued.																	
229	Bottom Fork Link (Tapped)	1 3	..	..	..	F360	..	..	..	..	..	..	..	..	..	..	✻	O
230	Top Fork Spindle, less Nut (Front and Rear) 7¾ underhead	2 0	K832	..	..	..	✻	✻	..	..	..	..	..	..	..	..	..	O
	Top Fork Spindle, less Nut (Front and Rear) 6-15/32 underhead	10	..	H794-1	..	..	..	..	✻	✻	✻	✻	✻	..	..	..	..	O
	Top Fork Spindle, less Nut (Front and Rear) 7-7/32 underhead	1 6	..	..	G310-1	..	..	..	..	..	..	..	..	✻	✻	✻	..	O
	Top Fork Spindle, less Nut (Front and Rear) 6-5/16 underhead	10	..	..	..	F361	..	..	..	..	..	..	..	..	..	..	✻	O
231	Bottom Fork Spindle, less Nut (Front) .. 9½ underhead	2 3	K833	..	..	..	✻	✻	..	..	..	..	..	..	..	..	..	O
	Bottom Fork Spindle, less Nut (Front) .. 7-7/32 underhead	1 3	..	RA1180	..	..	..	..	✻	✻	✻	✻	✻	..	..	..	..	..
	Bottom Fork Spindle, less Nut (Front) .. 7-25/32 underhead	1 9	..	..	G311	..	..	..	..	..	..	..	..	✻	✻	✻	..	O
232	Bottom Fork Spindle, less Nut .. .. (Front and Rear) 6-19/32 underhead	10	..	..	..	RA1220	..	..	..	..	..	..	..	..	..	..	✻	..
	Bottom Fork Spindle, less Nut (Rear) .. 9¾ underhead	2 3	RA1240	..	..	..	✻	✻	..	..	..	..	..	..	..	..	..	O
	Bottom Fork Spindle, less Nut (Rear) .. 7-11/32 underhead	1 3	..	RA1260	..	..	..	..	✻	✻	✻	✻	✻	..	.	..	..	..
	Bottom Fork Spindle, less Nut (Rear) .. 7-29/32 underhead	1 9	..	..	RA1280	..	..	..	..	..	..	..	..	✻	✻	✻	..	O
N.I.	Fork Spindle Nut (plated) .. .. ½ x 26 x 11/32 x 13/16	4	K834	..	..	..	✻	✻	..	..	..	..	..	..	..	..	..	O
	Fork Spindle Nut (plated) .. .. 7/16 x 26 x 5/16 x 11/16	3	..	H800	G312	..	..	..	✻	✻	✻	✻	✻	✻	✻	✻	..	O
	Fork Spindle Nut (plated) .. .. ⅝ x 26 x ½ x 9/16	3	..	..	..	F363	..	..	..	..	..	..	..	..	..	..	✻	O
233	Friction Discs.. .. .. per pair..	7	K825	..	..	..	✻	✻	..	..	..	..	..	..	..	..	..	O
	Friction Discs.. .. .. per pair..	4	..	H807	G313	..	..	..	✻	✻	✻	✻	✻	✻	✻	✻	..	O
234	Spring Washer for Friction Discs .. per pair..	9	K836	..	..	..	✻	✻	..	..	..	..	..	..	..	..	..	O
	Spring Washer for Friction Discs .. per pair..	3	..	H809	G314	..	..	..	✻	✻	✻	✻	✻	✻	✻	✻	..	O
235	Fork Spring	6 6	RA1440	..	..	..	✻	✻	..	..	..	..	..	..	..	..	..	..
	Fork Spring	6 0	..	RA1460	..	..	..	..	✻	✻	✻	✻	✻	..	..	..	..	..
	Fork Spring	6 6	..	..	RA1480	..	..	..	..	..	..	..	..	✻	✻	✻	..	..
	Fork Spring	3 6	..	..	..	RA1500	..	..	..	..	..	..	..	..	..	..	✻	..
236	Fork Spring Dish	1 6	RA1520	RA1520	RA1520	..	✻	✻	✻	✻	✻	✻	✻	✻	✻	✻	..	..
	Fork Spring Dish	1 6	..	..	..	RA1540	..	..	..	..	..	..	..	..	..	..	✻	..
237	Pin for Fork Spring Dish .. .. ⅜ x 2-5/32 x 20	3	RA1560	RA1560	RA1560	..	✻	✻	✻	✻	✻	✻	✻	✻	✻	✻	..	..

This scan is explicit for non-commercial use and is not intended for financial or material gain by anyone

When Ordering Quote Description and Part Number from Correct Column for your Horse Power and Model.

NOTE ✻ Indicates models for which Part is suitable.
When ✻ occurs in more than one column in same line Part is interchangeable.

Illustration No.	DESCRIPTION OF PART.	Price. £ s. d.	PART NUMBER 9.96 h.p.	3.49 h.p.	4.98 h.p.	2.48 h.p.	MODELS M1 Twin	M2 Twin	M3 s.v.	M4 s.v.	M5 s.v.	M6 o.h.v.	M7 o.h.c.	M8 o.h.v.	M9 s.v.	M10 o.h.c.	M12 s.v.	For Dealer's Use.
	Spring Forks—Continued.																	
237	Pin for Fork Spring Dish .. ⅜ x 1-25/32 x 20	3	..	..	..	RA1580	..	..	..	..	..	..	..	..	..	..	✻	..
238	Grease Nipples	3	K546	H180	G54-2	F196	✻	✻	✻	✻	✻	✻	✻	✻	✻	✻	✻	O
239	Frame Head Race (Top or Bottom) ..	1 6	K846	H821	G315	..	✻	✻	✻	✻	✻	✻	✻	✻	✻	✻	..	O
	Frame Head Race (Top or Bottom) ..	1 6	..	..	..	F367	..	..	..	..	..	..	..	..	..	..	✻	O
240	Fork Stem Race (Bottom)	1 6	K849	H823	G316	..	✻	✻	✻	✻	✻	✻	✻	✻	✻	✻	..	O
	Fork Stem Race (Bottom)	1 6	..	..	..	F368	..	..	..	..	..	..	..	..	..	..	✻	O
241	Steering Collar, with Race	4 0	K854	H819	G320	..	✻	✻	✻	✻	✻	✻	✻	✻	✻	✻	..	O
	Steering Collar, with Race	4 0	..	..	..	F366	..	..	..	..	..	..	..	..	..	..	✻	O
N.I.	Ball Bearings for Races, 3/16 .. set 56..	1 3	K856	H825	G319	..	✻	✻	✻	✻	✻	✻	✻	✻	✻	✻	..	O
	Ball Bearings for Races, 3/16 .. set 50..	1 2	..	..	..	F369	..	..	..	..	..	..	..	..	..	..	✻	O

This scan is explicit for non-commercial use and is not intended for financial or material gain by anyone

When ordering Quote Description and Part Number from Correct Column for your Horse Power and Model.

NO· ✻ Indicates models for which Part is suitable.
When ✻ occurs in more than one column in same line Part is interchangeable.

Illustration No.	DESCRIPTION OF PART.	Price. £ s. d.	PART NUMBER 9.96 h.p.	3.49 h.p.	4.98 h.p.	2.48 h.p.	MODELS M1 Twin	M2 Twin	M3 s.v.	M4 s.v.	M5 s.v.	M6 o.h.v.	M7 o.h.c.	M8 o.h.v.	M9 s.v.	M10 o.h.c.	M12 s.v.	For Dealer's Use.
	Handlebars.																	
	Handlebars only, less Grips	9 0	RA1850	RA1850	RA1850	..	✻	✻	✻	✻	✻	✻	..	✻	✻	..	..	..
242	Handlebars only, less Grips	17 3	..	..	..	F500	..	..	..	..	..	..	..	..	..	..	✻	O
	Handlebars only, less Grips, (New Type, Flat Sports)	9 0	RA1890	RA1890	RA1890	..	✻	✻	..	✻	✻	✻	✻	✻	✻	✻	..	..
	Drawbolt only for Handlebars	1 3	..	..	..	F502	..	..	..	..	..	..	..	..	..	..	✻	O
N.I.	Plug only for Handlebars	6	..	..	..	F503	..	..	..	..	..	..	..	..	..	..	✻	O
	Washer only for Handlebars, ⅜ Plain ..	1	..	..	..	WA3200	..	..	..	..	..	..	..	..	..	..	✻	O
243	Clips only for Handlebars .. pair..	5 0	RA1960	RA1960	RA1960	..	✻	✻	✻	✻	✻	✻	✻	✻	✻	✻	..	..
244	Pins for Clips for Handlebars (plated) each.. 5/16 x 1-9/32 x 20	3	RA1980	RA1980	RA1980	..	✻	✻	✻	✻	✻	✻	✻	✻	✻	✻	..	..
245	Celluloid Grips .. .. pair..	1 0	K1054	H1022	G335-3	F501	✻	✻	✻	✻	✻	✻	✻	✻	✻	✻	✻	O †
	Lamp Brackets.																	
	Electric Lamp Bracket (R.H.)	1 9	RA2100	RA2100	RA2100	..	✻	✻	✻	✻	✻	✻	✻	✻	✻	✻	..	..
	Electric Lamp Bracket (L.H.)	1 9	RA2120	RA2120	RA2120	..	✻	✻	✻	✻	✻	✻	✻	✻	✻	✻	..	..
	Electric Lamp Bracket (R.H.)	1 9	..	..	..	RA2140	..	..	..	..	..	..	..	..	..	..	✻	..
	Electric Lamp Bracket (L.H.)	1 9	..	..	..	RA2160	..	..	..	..	..	..	..	..	..	..	✻	..
	Acetylene Lamp Bracket, to suit Lucas No. 420 (R.H.)	1 9	..	RA2180	RA2180	..	..	..	✻	✻	✻	✻	✻	✻	✻	✻	..	..
	Acetylene Lamp Bracket, to suit Lucas No. 420 (L.H.)	1 9	..	RA2200	RA2200	..	..	..	✻	✻	✻	✻	✻	✻	✻	✻	..	..
	Acetylene Lamp Bracket, to suit Lucas No. 420 R.H.	1 9	..	..	..	RA2220	..	..	..	..	..	..	..	..	..	..	✻	..
N.I.	Acetylene Lamp Bracket, to suit Lucas No. 420 (L.H.)	1 9	..	..	..	RA2240	..	..	..	..	..	..	.	..	..	..	✻	..
	Acetylene Lamp Bracket, to suit Lucas No. 320 (R.H.)	1 9	..	..	..	RA2260	..	..	..	..	..	..	..	..	..	..	✻	..
	Acetylene Lamp Bracket, to suit Lucas No. 320 (L.H.)	1 9	..	..	..	RA2280	..	..	..	..	..	..	..	..	..	..	✻	..
	Clip only for Lamp Bracket	5	RA2300	RA2300	RA2300	RA2300	✻	✻	✻	✻	✻	✻	✻	✻	✻	✻	✻	..
	Stay only for Lamp Bracket .. pair..	8	RA2320	..	..	..	✻	✻	..	..	..	..	..	..	..	..	..	..
	Stay only for Lamp Bracket .. pair..	8	..	RA2340	RA2340	..	..	..	✻	✻	✻	✻	✻	✻	✻	✻	..	..
	Stay only for Lamp Bracket .. pair..	8	..	..	..	RA2360	..	..	..	..	..	..	..	..	..	..	✻	..
	Pin for Stay for Lamp Bracket .. .. ¼ x ½ x 20	2	RA2380	RA2380	RA2380	RA2380	✻	✻	✻	✻	✻	✻	✻	✻	✻	✻	✻	..
	Nut for Pin for Lamp Bracket .. .. ¼ x 20 x 3/16 x 7/16	1	K110	H133	G27-1	F34	✻	✻	✻	✻	✻	✻	✻	✻	✻	✻	✻	O

This scan is explicit for non-commercial use and is not intended for financial or material gain by anyone

When Ordering Quote Description and Part Number from Correct Column for your Horse Power and Model.

NOTE ✲ Indicates models for which Part is suitable.
When ✲ occurs in more than one column in same line Part is interchangeable.

Illustration No.	DESCRIPTION OF PART.	Price. £ s. d.	PART NUMBER 9.96 h.p.	3.49 h.p.	4.98 h.p.	2.48 h.p.	MODELS M1 Twin.	M2 Twin	M3 s.v.	M4 s.v.	M5 s.v.	M6 o.h.v.	M7 o.h.c.	M8 o.h.v.	M9 s.v.	M10 o.h.c.	M12 s.v.	For Dealer's Use.
	Frame and Fittings.																	
246	Frame complete	11 10 0	RA2500	..	..	..	✲	✲	..	..	..	..	..	..	..	..	..	..
	Frame complete	9 4 0	..	RA2520	..	..	..	..	✲	✲	✲	✲	✲	..	..	..	..	..
	Frame complete	9 15 6	..	..	RA2540	..	..	..	..	..	..	..	..	✲	✲	✲	..	..
	Frame complete	8 1 0	..	..	..	RA2560	..	..	..	..	..	..	..	..	..	..	✲	..
247	Adjusting Pin for Rear Wheel	3	K869	..	G326	..	✲	✲	..	..	..	..	..	✲	✲	✲	..	O
	Adjusting Pin for Rear Wheel	3	..	H854	..	F387	..	..	✲	✲	✲	✲	✲	..	..	..	✲	O
N.I.	Nut for Adjusting Pin for Rear Wheel .. ¼ x 20 x 3/16 x 7/16	1	K110	H133	G27-1	F34	✲	✲	✲	✲	✲	✲	✲	✲	✲	✲	✲	O
248	Long Bolt for T Piece Saddle Support .. ⅜ x 9-9/16 x 20 both ends	1 3	RA2740	RA2740	G298-B6	..	✲	✲	✲	✲	✲	✲	✲	✲	✲	✲	..	O
	Long Bolt for T Piece Saddle Support .. ⅜ x 8-7/16 x 20 both ends	1 3	..	..	..	F821	..	..	..	..	..	..	..	..	..	..	✲	O
N.I.	Nut for Long Bolt for T Piece Saddle Support ⅜ x 20 x ⅜ x 19/32	2	K1546	H1521-3	G298-B2	F822	✲	✲	✲	✲	✲	✲	✲	✲	✲	✲	✲	O
	Washer for Long Bolt for T Piece Saddle Support ⅜ Single Spring	1	K300	H160	G79-1	F89	✲	✲	✲	✲	✲	✲	✲	✲	✲	✲	✲	O
	Plug for T Piece Saddle Support	6	K1552	H1521-9	G298-B8	F823	✲	✲	✲	✲	✲	✲	✲	✲	✲	✲	✲	O
249	Seat Stay Bolt, ½ x 3¼ x 2	7	RA2840	..	..	..	✲	✲	..	..	..	..	..	..	..	..	..	..
	Seat Stay Bolt, ½ x 3 7/16 x 24	7	..	..	G324	..	..	..	..	..	..	..	..	✲	✲	✲	..	O
	Seat Stay Bolt, 7/16 x 3 3/16 x 20	7	..	RA2880	..	..	..	..	✲	✲	✲	✲	✲	..	..	..	..	..
	Seat Stay Bolt, ⅜ x 2 13/16 x 26	7	..	..	..	RA2900	..	..	..	..	..	..	..	..	..	..	✲	..
N.I.	Nut for Seat Stay Bolt, ½ x 24 x 7/16 x 53/64 ..	2	K297	..	RA2910	..	✲	✲	..	..	..	..	..	✲	✲	✲	..	O
	Nut for Seat Stay Bolt, 7/16 x 20 x 7/16 x 45/64	2	..	WA1060	..	..	..	..	✲	✲	✲	✲	✲	..	..	..	..	O
	Nut for Seat Stay Bolt, ⅜ x 26 x ⅜ x 9/16 ..	2	..	..	..	F5	..	..	..	..	..	..	..	..	..	..	✲	O
	Washer for Seat Stay Bolt, ½ Plain ..	1	WA1020	..	G155-2	..	✲	✲	..	..	..	..	..	✲	✲	✲	..	O
	Washer for Seat Stay Bolt, 7/16 Plain ..	1	..	H401	..	..	..	..	✲	✲	✲	✲	✲	..	..	..	..	O
	Washer for Seat Stay Bolt, ⅜ Plain ..	1	..	..	..	F386	..	..	..	..	..	..	..	..	..	..	✲	O

This scan is explicit for non-commercial use and is not intended for financial or material gain by anyone

When Ordering Quote Description and Part Number from Correct Column for your Horse Power and Model.

NOTE When ✱ Indicates models for which Part is suitable. occurs in more than one column in same line Part is interchangeab.

Illustration No.	DESCRIPTION OF PART.	Price £ s. d.	PART NUMBER 9.96 h.p.	3.49 h.p.	4.98 h.p.	2.48 h.p.	M1 Twin	M2 Twin	M3 s.v.	M4 s.v.	M5 s.v.	M6 o.h.v.	M7 o.h.c.	M8 o.h.v.	M9 s.v.	M10 o.h.c.	M12 s.v.	For Dealer's Use.
	Footrests.																	
	Footrests complete	19 6	RA2940	..	..	..	✱	✱	..	..	..	..	..	..	..	..	..	..
	Footrests complete, with Brake Pedal ..	1 7 0	..	RA2960	..	..	..	..	..	✱	✱	✱	✱	..	..	..	..	..
250	Footrests complete with Brake Pedal (M6 Two Port) ..	1 7 0	..	RA2960	..	..	..	..	..	..	..	✱2P	..	..	..	..	..	..
	Footrests complete, with Brake Pedal ..	1 8 3	..	..	RA2980	..	..	..	..	..	..	..	..	✱	✱	✱	..	..
	Footrests complete, with Brake Pedal (M8, 2 Port) ..	1 8 3	..	..	RA3000	..	..	..	..	..	..	..	..	✱2P	..	..	..	..
	Footrests complete, with Brake Pedal ..	1 7 0	..	..	..	RA3020	.	.	..	..	..	..	..	..	..	..	✱	..
	Footrest Arm only (R.H.)	2 9	RA3040	RA3040	RA3040	..	✱	✱	..	✱	✱	✱	✱	✱	✱	✱	..	..
	Footrest Arm only (R.H.) (M6 Two Port) ..	2 9	..	RA3040	..	..	..	..	..	..	..	✱2P	..	..	..	..	..	..
251	Footrest Arm only (R.H. or L.H.) (M8, 2 Port) ..	2 9	..	..	RA3060	..	..	..	..	..	..	..	..	✱2P	.	..	..	..
	Footrest Arm only (R.H.)	3 3	..	..	..	RA3080	..	..	..	..	..	..	..	..	..	..	✱	..
	Footrest Arm only (L.H.)	3 3	RA3100	..	RA3100	..	✱	✱	..	..	..	..	..	✱	✱	..	..	..
	Footrest Arm only (L.H.)	3 3	..	RA3120	..	..	..	..	..	✱	✱	✱	..	..	..	..	..	..
252	Footrest Arm only (R.H.) (M6 Two Port) ..	3 3	..	RA3120	..	..	..	..	..	..	..	✱2P	..	..	..	..	..	..
	Footrest Arm only (L.H. same as R.H.) ..	2 9	..	RA3040	RA3040	..	..	..	..	..	..	..	✱	..	..	✱	..	..
	Footrest Arm only (L.H.)	3 3	..	..	..	F601	..	..	..	..	..	..	..	..	..	..	✱	O
253	Footrest Rubber	1 6	RA3080	H1178	G267	F602	✱	✱	..	✱	✱	✱	✱	✱	✱	✱	✱	O
254	Inner Washer for Footrest	7	RA3100	H1180	G269	F604	✱	✱	..	✱	✱	✱	✱	✱	✱	✱	✱	O
255	Outer Washer for Footrest	7	RA3120	H1179	G268	F603	✱	✱	..	✱	✱	✱	✱	✱	✱	✱	✱	O
256	Pin for Outer Washer for Footrest 5/16 x ¾ x 20 ..	2	K559	H537	G173-8	RA3140	✱	✱	..	✱	✱	✱	✱	✱	✱	✱	✱	O
	Footrest Rod only (Short) 9 in. over all ..	10	RA3260	..	..	..	✱	✱	..	..	..	..	..	..	..	..	..	..
	Footrest Rod only (Long) 9-13/16 over all ..	11	RA3280	..	..	..	✱	✱	..	..	..	..	.	..	..	..	..	..
	Footrest Rod only 9-5/16 over all	10	..	H1183-1	..	..	..	..	..	✱	✱	✱	..	..	..	..	..	O
	Footrest Rod only, 9-5/16 over all .. (M6 Two Port) ..	10	..	H1183-1	..	..	..	..	..	..	..	✱2P	..	..	..	..	..	O
257	Footrest Rod only, 14-11/16 over all .	11	..	H1183-2	G254-1A	..	..	..	..	..	..	..	✱	..	..	✱	..	O
	Footrest Rod only (M8, 2 Port) 16½ over all ..	1 0	..	..	RA3340	..	..	..	..	..	..	..	..	✱2P	..	..	..	..
	Footrest Rod only 9-5/16 over all	11	..	..	RA3360	..	..	..	..	..	..	..	..	✱	✱	..	..	..
							..	..	..	..	..	..	..	..	..	..	✱	..

This scan is explicit for non-commercial use and is not intended for financial or material gain by anyone

When Ordering Quote Description and Part Number from Correct Column for your Horse Power and Model.

NOT When ✱ Indicates models for which Part is suitable. ✱ occurs in more than one column in same line Part is interchangeable.

Illustration No.	DESCRIPTION OF PART.	Price. £ s. d.	PART NUMBER 9.96 h.p.	3.49 hp.	4.98 h.p.	2.48 h.p.	M1 Twin	M2 Twin	M3 s.v.	M4 s.v.	M5 s.v.	M6 o.h.v.	M7 o.h.c.	M8 o.h.v.	M9 s.v.	M10 o.h.c.	M12 s.v.	For Dealer's Use.
	Footrests—Continued.																	
258	Washer for Footrest Rod, 7/16 Plain ..	1	WA1520	H401	G113-2	F119	✱	✱	..	✱	✱	✱	✱	✱	✱	✱	✱	O
259	Nut for Footrest Rod .. .. .. 7/16 x 26 x 17/64 x 45/64	1	WA2500	H532	G254-2	F607	✱	✱	..	✱	✱	✱	✱	✱	✱	✱	✱	O
	Footrest Distance Tube (Centre) .. .. 3-7/16 long x 13/16 outside diameter	6	.	H1186	..	..	..	..	..	✱	✱	✱	..	..	..	..	..	O
	Footrest Distance Tube (Centre) (M6 2 Port) 3-7/16 long x 13/16 outside diameter	6	..	H1186	..	..	..	..	..	..	..	✱2P	..	..	..	..	..	O
	Footrest Distance Tube (Centre) .. .. 4¾ long x 13/16 outside diameter	6	..	RA3480	..	..	..	..	..	..	..	..	✱	..	..	..	..	..
	Footrest Distance Tube (Centre) .. .. 4-⅜ long x 13/16 outside diameter	6	..	..	RA3490	..	..	..	..	..	..	..	..	..	..	✱	..	..
	Footrest Distance Tube (3 used) .. .. 3-9/16 long x 13/16 outside diameter	6	..	..	RA3500	..	..	..	..	..	..	..	..	✱	✱	..	..	
	Footrest Distance Tube (1 used) (M8, 2 Port) 3-9/16 long x 13/16 outside diameter (Centre)	6	..	..	RA3500	..	..	..	..	..	..	..	..	✱2P	..	..	..	.
	Footrest Distance Tube (2 used) .. .. 3½ long x ¾ outside diameter	6	..	..	..	F610	..	..	..	..	..	..	..	..	..	..	✱	O
	Footrest Distance Tube (Timing Side, long) 3⅞ x 13/16 outside diameter	6	RA3560	..	RA3560	..	✱	✱	..	..	..	..	..	✱2P	..	..	..	..
	Footrest Distance Tube (Timing Side, long) 3-11/16 long x 13/16 outside diameter	6	..	RA3580	..	..	..	..	..	✱	✱	✱	..	..	..	..	..	..
	Footrest Distance Tube (Timing Side long) 3-11/16 long x 13/16 outside diameter (M6 Two Port)	6	..	RA3580	..	..	..	..	..	..	..	✱2P	..	..	..	..	..	..
200	Footrest Distance Tube (Timing Side, long) 2 long x 13/16 outside diameter	4	..	..	RA3600	..	..	..	..	..	..	..	..	✱	✱	..	..	..
	Footrest Distance Tube (Timing or Driving Side, long) 2¼ long x ¾ outside diameter	4	..	..	..	RA3620	..	..	..	..	..	..	..	..	..	..	✱	..
	Footrest Distance Tube (Timing or Driving Side, long) 3¼ long x 13/16 outside diameter	6	..	RA3640	RA3640	..	..	..	..	..	..	..	✱	..	..	✱	..	..
	Footrest Distance Tube (Timing Side, short) 1-5/16 long x 13/16 outside diameter	3	..	H1188-3	..	..	..	..	..	✱	✱	✱	..	..	..	..	..	O
	Footrest Distance Tube (Timing Side, short) 1-7/16 long x 13/16 outside diameter	3	..	..	RA3680	..	..	..	..	..	..	..	..	✱	✱	..	..	..
	Footrest Distance Tube (Timing Side, short) 1½ long x ¾ outside diameter	3	..	..	..	F611	..	..	..	..	..	..	..	..	..	..	✱	O
	Footrest Distance Tube (Timing or Driving Side) (2 used) M6, 2 Port, 3-11/16 long x 13/16 outside diameter	6	..	H1186-1	..	..	..	..	..	..	..	✱2P	..	..	..	..	..	O
	Footrest Distance Tube (Timing or Driving Side) M8, 2 Port, 2 used, short, 9/16 long x 13/16 outside diameter	2	..	..	RA3740	..	..	..	..	..	..	..	..	✱2P	..	..	..	..
	Footrest Distance Tube (Driving Side, long) (M8, 2 Port) 4¼ long x 13/16 outside diameter	3	..	..	RA3760	..	..	..	..	..	..	..	..	✱2P	..	..	..	..
	Footrest Distance Tube on Brake Pedal Spindle 4¾ long x 13/16 outside diameter	6	..	RA3780	RA3780	..	..	..	..	..	..	..	✱	..	..	✱	..	..
	Footrest Distance Tube, 2⅞ long x 13/16 outside diameter	4	RA3800	..	..	..	✱	✱	..	..	..	..	..	..	..	..	..	..
	Footrest Engine Plate (2 used)	1 3	RA3820	..	..	..	✱	✱	..	..	..	..	..	..	..	..	..	..
261	Footrest Engine Plate (R.H. or L.H.) (2 used)	1 3	..	RA3840	..	..	..	..	..	✱	✱	✱	..	..	..	..	..	..
	Footrest Engine Plate (R.H. or L.H.) (2 used) (M6, 2 Port)	1 3	..	RA3840	..	..	..	..	..	..	..	✱2P	..	..	..	..	..	..

This scan is explicit for non-commercial use and is not intended for financial or material gain by anyone

Wh.. ..rdering Quote Description and Part Number from Correct Column for your Horse Power and Model.

NOT Wher.. ✻ Indicates models for which Part is suitable. ✻ occurs in more than one column in same line Part is interchangeab.

Illustration No.	DESCRIPTION OF PART.	Price. £ s. d.	PART NUMBER 9.96 h.p.	3.49 h.p.	4.98 h.p.	2.48 h.p.	MODELS M1 Twin	M2 Twin	M3 s.v.	M4 s.v.	M5 s.v.	M6 o.h.v.	M7 o.h.c.	M8 o.h.v.	M9 s.v.	M10 o.h.c.	M12 s.v.	For Dealer's Use.
	Footrests—Continued.																	
	Footrest Engine Plate (R.H. or L.H.) (2 used)	1 3	..	RA3880	..	..	..	..	..	..	..	..	✻	..	..	..	..	..
	Footrest Engine Plate (Driving Side), Outside	1 3	..	..	RA3900	..	..	..	..	..	..	..	..	✻	✻	..	..	..
	Footrest Engine Plate (Driving Side), Outside (M8, Two Port)	1 3	..	..	RA3900	..	..	..	..	..	..	..	..	✻2P	..	..	..	..
	Footrest Engine Plate (Driving Side), Inside	1 3	..	..	RA3920	..	..	..	..	..	..	..	..	✻	✻	..	..	..
	Footrest Engine Plate (Driving Side), Inside (M8, 2 Port)	1 3	..	..	RA3940	..	..	..	..	..	..	..	..	✻2P	..	..	..	..
	Footrest Engine Plate (Timing Side) ..	1 3	..	..	RA3960	..	..	..	..	..	..	..	..	✻	✻	..	..	..
	Footrest Engine Plate (Timing Side) .. (M8, 2 Port)	1 3	..	..	RA3980	..	..	..	..	..	..	..	..	✻2P	..	..	..	..
261	Footrest Engine Plate (Timing or Driving Side)	1 3	..	..	..	RA4000	..	..	..	..	..	..	..	..	..	..	✻	..
	Footrest Engine Plate (for use with 2 Pedals (1 used L.H.)	1 3	..	RA4020	..	..	..	..	..	..	..	..	✻	..	..	..	..	..
	Footrest Engine Plate for use with 2 Pedals (1 used R.H.)	1 3	..	RA4040	..	..	..	..	..	..	..	..	✻	..	..	..	..	..
	Footrest Engine Plate for use with 1 Pedal.. (L.H. or R.H.)	1 3	..	RA4020	..	..	..	..	..	..	..	..	✻	..	..	..	..	..
	Footrest Engine Plate for use with 2 Pedals .. (L.H. 1 used)	1 3	..	..	RA4060	..	..	..	..	..	..	..	..	..	..	✻	..	..
	Footrest Engine Plate for use with 2 Pedals .. (R.H. 1 used)	1 3	..	..	RA4080	..	..	..	..	..	..	..	..	..	..	✻	..	..
	Footrest Engine Plate for use with 1 Pedal .. L.H. or R.H.)	1 3	..	..	RA4060	..	..	..	..	..	..	..	..	..	..	✻	..	..
	Footrest Distance Piece (large)	6	..	RA4100	RA4100	..	..	..	..	..	..	..	✻	..	..	✻	..	..
N.I.	Footrest Distance Piece (small)	3	..	RA4120	..	..	..	..	..	..	..	..	✻	..	..	..	..	..
	Footrest Distance Piece (small)	3	..	..	RA4140	..	..	..	..	..	..	..	..	..	..	✻	..	..
	Footboards.																	
262	Footboards, complete with Rods	1 6 6	RA5100	..	..	..	✻	✻	..	..	..	..	..	..	..	..	..	..
	Footboards, complete with Rods	1 5 3	..	RA5120	..	..	..	..	✻	..	..	..	..	..	..	..	..	..
263	Footboard only, with Mat and Brackets (R.H. or L.H.)	9 3	RA5140	..	..	..	✻	✻	..	..	..	..	..	..	..	..	..	..
	Footboard only, with Mat and Brackets (R.H. or L.H.)	9 3	..	RA5160	..	..	..	..	✻	..	..	..	..	..	..	..	..	..
264	Footboard Rubber Mat	5 6	K1218	H1148	..	..	✻	✻	✻	..	..	..	..	..	..	..	..	O

This scan is explicit for non-commercial use and is not intended for financial or material gain by anyone

Wh.)rdering Quote Description and Part Number from Correct Column for your Horse Power and Model.

NC ✻ Indicates models for which Part is suitable.
Wh. ✻ occurs in more than one column in same line Part is interchai ble.

Illustration No.	DESCRIPTION OF PART.	Price. £ s. d.	PART NUMBER 9.96 h.p.	3.49 h.p.	4.98 h.p.	2.48 h.p.	MODELS M1 Twin	M2 Twin	M3 s.v.	M4 s.v.	M5 s.v.	M6 o.h.v.	M7 o.h.c.	M8 o.h.v.	M9 s.v.	M10 o.h.c.	M12 s.v.	For Dealer's Use
	Footboards—Continued.																	
265	Wood Base for Footboard	1 6	K1219	H1149	..	..	✻	✻	✻	..	..	..	..	..	..	..	..	O
266	Engine Plate for Footboard	1 3	..	H1149-1	..	..	..	..	✻	..	..	..	..	..	..	..	..	O
267	Long Distance Tube (Front) (L.H.) .. 5-3/16 x 11/16, outside diameter	7	RA5240	..	..	..	✻	✻	..	..	..	..	..	..	..	..	..	..
	Long Distance Tube (Front) (L.H. or R.H.) .. 4⅛ x ⅝, outside diameter	6	..	H1152-1	..	..	..	..	✻	..	..	..	..	..	..	..	..	O
	Short Distance Tube (Front or Rear) .. (L.H. or R. H.) 2¾ x 11/16, outside diameter	3	RA5280	..	..	..	✻	✻	..	..	..	..	..	..	..	..	..	..
	Short Distance Tube (Front or Rear) .. (L.H. or R.H.) 2¾ x ⅝, outside diameter	3	..	H1158-1	..	..	..	..	✻	..	..	..	..	..	..	..	..	O
	Long Distance Tube (Rear) (L.H.) .. 4 9/16 x 11/16, outside diameter	6	RA5320	..	..	..	✻	✻	..	..	..	..	..	..	..	..	..	..
	Long Distance Tube (Rear) (L.H.) .. 4⅞ x ⅝, outside diameter	4	..	H1159-1	..	..	..	..	✻	..	..	..	..	..	..	..	..	O
	Short Distance Tube (Front) (R.H.) .. 2¼ x 11/16, outside diameter	3	RA5360	..	..	..	✻	✻	..	..	..	..	..	..	..	..	..	..
	Long Distance Tube (Rear) (R.H.) .. 4⅞ x ⅝, outside diameter	3	..	H1155-1	..	..	..	..	✻	..	..	..	..	..	..	..	..	O
	Centre Distance Tube 3 7/16 x ⅝ .. .. outside diameter	5	..	RA5400	..	..	..	..	✻	..	..	..	..	..	..	..	..	..
	Distance Tube for Brake Pedal Plate .. ½ x 11/16, outside diameter	3	RA5420	..	..	..	✻	✻	..	..	..	..	..	..	..	..	..	..
268	Footboard Clip only	6	K1225	..	..	..	✻	✻	..	..	..	..	..	..	..	..	..	O
	Footboard Clip only	6	..	RA5460	..	..	..	..	✻	..	..	..	..	..	..	..	..	..
269	Footboard Rod (Long) 21 x ½	1 9	K1232	..	..	..	✻	✻	..	..	..	..	..	..	..	..	..	O
	Footboard Rod (Long) 20⅞ x 7/16	1 3	..	RA5500	..	..	..	..	✻	..	..	..	..	..	..	..	..	..
270	Footboard Rod (Short) with Hex. Head . 12¾ x ½	1 3	RA5520	..	..	..	✻	✻	..	..	..	..	..	..	..	..	..	..
	Footboard Rod (Short) 19¼ x 7/16	1 3	..	RA5540	..	..	..	..	✻	..	..	..	..	..	..	..	..	..
271	Nuts for Footboard Rods, ¼ x 24 x ¼ x 45/64 ..	1	ZA7130	..	..	..	✻	✻	..	..	..	..	..	..	..	..	..	O
	Nuts for Footboard Rods, ... 7/16 x 26 x 17/64 x 45/64	1	..	H532	..	..	..	..	✻	..	..	..	..	..	..	..	..	O
N.I.	Washers for Nuts for Footboard Rods .. ½ single spring	1	K301	..	..	..	✻	✻	..	..	..	..	..	..	..	..	..	O
N.I.	Washers for Nuts for Footboard Rods .. 7/16 single spring	1	..	WA1520	..	..	..	..	✻	..	..	..	..	..	..	..	..	O
272	Pins for Footboard Clips ¼ x 13/16 x 20 ..	1	RA5640	RA5640	..	..	✻	✻	✻	..	..	..	..	..	..	..	..	O
	Nuts for Footboard Clips ¼ x 20 x 3/16 x 7/16 .. Square	1	RA5660	RA5660	..	..	✻	✻	✻	..	..	..	..	..	..	..	..	O
N.I.	Supporting Arm for Footboards	1 9	RA5680	..	..	..	✻	✻	..	..	..	..	..	..	..	..	..	..
	Bolt for Supporting Arm for Footboards .. ½ x 4⅛ x 24	8	RA5700	..	..	..	✻	✻	..	..	..	..	..	..	..	..	..	..

This scan is explicit for non-commercial use and is not intended for financial or material gain by anyone

Wher dering Quote Description and Part Number from Correct Column for your Horse Power and Model.

NC ✱ Indicates models for which Part is suitable.
Wh ✱ occurs in more than one column in same line Part is interchangea.

Illustration No.	DESCRIPTION OF PART.	Price. £ s. d.	PART NUMBER 9.96 h.p.	3.49 h.p.	3.49 h.p.	2.48 h.p.	M1 Twin	M2 Twin	M3 s.v.	M4 s.v.	M5 s.v.	M6 o.h.v.	M7 o.h.c.	M8 o.h.v.	M9 s.v.	M10 o.h.c.	M12 s.v.	For Dealer's Use.
	Brake Pedal and Fittings.																	
	Rear Brake Operating Pedal (Footboards) ..	8 9	K761	..	..	..	✱	✱	..	..	..	..	..	..	..	..	..	O
	Rear Brake Operating Pedal (Footrests) ..	8 9	RA6020	..	..	..	✱	✱	..	..	..	..	..	..	..	..	..	..
	Rear Brake Operating Pedal (Footboards) ..	8 9	..	H742-1	..	..	..	..	✱	..	..	..	..	..	..	..	..	O
	Rear Brake Operating Pedal (Footrests) ..	8 9	..	RA6050	..	..	..	..	..	✱	✱	✱	..	..	..	..	..	..
	Rear Brake Operating Pedal (Footrests) ..	8 9	..	RA6080	..	..	..	..	..	..	..	..	✱	..	..	..	..	..
273	Rear Brake Operating Pedal (Footrests) ..	8 9	..	..	G265	..	..	..	..	..	..	..	..	✱	✱	..	..	O
	Rear Brake Operating Pedal (Footrests) ..	8 9	..	..	RA6120	..	..	..	..	..	..	..	..	..	..	✱	..	..
	Rear Brake Operating Pedal (Footrests) ..	8 9	..	..	..	RA6140	..	..	..	..	..	..	..	..	..	..	✱	..
	Front Brake Pedal (Footboards)	8 9	RA6200	..	..	..	✱	✱	..	..	..	..	..	..	..	..	..	..
	Front Brake Pedal (Footrests)	8 9	RA6220	..	..	..	✱	✱	..	..	..	..	..	..	..	..	..	..
	Front Brake Pedal (Footrests)	8 9	..	H743-2	G265-4	..	..	..	..	..	..	..	✱	..	..	✱	..	O
	Brake Pedal Spindle (Footboards) ..	1 9	K763	..	..	..	✱	✱	..	..	..	..	..	..	..	..	..	O
	Brake Pedal Spindle (Footrests)	3 6	RA6280	..	..	..	✱	✱	..	..	..	..	..	..	..	..	..	..
	Brake Pedal Spindle (Footboards) ..	1 6	..	H745	..	..	..	..	✱	..	..	..	..	..	..	..	..	O
274	Brake Pedal Spindle (Footrests)	1 6	..	H746-1	..	..	..	..	..	✱	✱	✱	..	..	..	..	..	O
	Brake Pedal Spindle (Footrests)	2 3	..	RA6340	RA6340	..	..	..	..	..	..	..	✱	..	..	✱	..	..
	Brake Pedal Spindle (Footrests)	1 6	..	..	RA6360	..	..	..	..	..	..	..	..	✱	✱	..	..	..
275	Distance Tube for Brake Pedal .. .. 1-7/16 long x 13/16 diameter	4	..	..	..	RA6380	..	..	..	..	..	..	..	..	..	..	✱	..
N.I.	Washer for Brake Pedal Spindle, 5/16 plain ..	1	ZA6830	..	ZA6830	..	✱	✱	..	..	..	..	..	✱	✱	..	..	O
N.I.	Washer for Brake Pedal Spindle, 7/16 plain ..	1	..	H401	G113-2	..	..	..	..	..	..	..	✱	.	..	✱	..	O
	Nut for Brake Pedal Spindle .. .. 5/16 x 26 x 9/32 x 17/32	1	ZA7160	H177	G55-3	..	✱	✱	..	✱	✱	✱	..	✱	✱	..	..	O
	Nut for Brake Pedal Spindle .. .. 7/16 x 26 x 5/16 x 11/16	1	RA6460	..	..	..	✱	✱	..	..	..	..	..	..	..	..	..	..
	Nut for Brake Pedal Spindle .. .. 5/16 x 20 x ½ x 19/32	1	K707	..	..	..	✱	✱	..	..	..	..	..	..	..	..	..	O
276	Nut for Brake Pedal Spindle .. .. 5/16 x 24 x 5/16 x 19/32	1	..	RA6500	..	..	..	..	✱	..	..	..	..	..	..	..	..	..
	Nut for Brake Pedal Spindle .. .. 7/16 x 26 x 17/64 x 45/64	1	..	H552	..	..	..	..	✱	..	..	..	.	..	..	..	..	O
	Nut for Brake Pedal Spindle ⅝ x 26 x ½ x 39/64	1	..	H290	..	..	..	..	..	✱	✱	✱	..	..	..	..	..	O

This scan is explicit for non-commercial use and is not intended for financial or material gain by anyone

When ering Quote Description and Part Number from Correct Column for your Horse Power and Model.

Brake Pedal and Fittings (Continued).

Illustration No.	DESCRIPTION OF PART.	Price. £ s. d.	PART NUMBER 9.96 h.p.	3.49 h.p.	4.98 h.p.	2.48 h.p.
276	Nut for Brake Pedal Spindle ½ x 24 x 5/16 x 45.64	1	..	RA6560	RA6560	..
N.I.	Cotter for Brake Pedal Spindle	1	..	RA6580	RA6580	..
N.I.	Washer for Brake Pedal Spindle ½ Double Spring	1	..	..	RA6610	..
277	Rear Brake Rod	1 9	RA6620	..	..	..
277	Rear Brake Rod	1 9	..	RA6640	..	..
277	Rear Brake Rod	1 9	..	RA6660	..	..
277	Rear Brake Rod	1 9	..	RA6680	..	..
277	Rear Brake Rod	1 9	..	..	RA6720	..
277	Rear Brake Rod	1 9	..	..	..	RA6740
278	Yoke End for Rear Brake Rod	7	YA4300	YA4300	YA4300	YA4300
279	Pin for Rear Brake Rod	1	YA4320	YA4320	YA4320	YA4320
N.I.	Cotter for Rear Brake Rod	1	YA2490	YA2490	YA2490	YA2490
280	Adjusting Spring for Rear Brake Rod (Plated)	2	RA6840	RA6840	RA6840	RA6480
281	Milled Nut for Adjusting Spring for Rear Brake Rod (Plated)	1 6	RA6860	RA6860	RA6860	RA6860
282	Clip for Adjusting Spring for Rear Brake Rod (Plated)	1 3	RA6880	RA6880	RA6880	RA6880
283	Washer for Adjusting Clip for Rear Brake Rod (Plated) ½ Plain	1	K111	H134	G27-2	F35
284	Rear Brake Stop (Footboards)	3 0	RA6920	..	..	..
284	Rear Brake Stop (Footrests)	1 0	RA6940	..	..	..
284	Rear Brake Stop	3 0	..	..	..	RA6960

NOTE ✻ Indicates models for which Part is suitable.
When ✻ occurs in more than one column in same line Part is interchangeable.

Illustration No.	MODELS M1 Twin	M2 Twin	M3 s.v.	M4 s.v.	M5 s.v.	M6 o.h.v.	M7 o.h.c.	M8 o.h.v.	M9 s.v.	M10 o.h.c.	M12 s.v.	For Dealer's Use.
276	..	..	..	..	..	..	✻	..	..	✻	..	..
N.I.	..	..	..	..	..	..	✻	..	..	✻	..	..
N.I.	..	..	..	..	..	..	..	✻	✻	..	..	..
277	✻	✻	.	..	..	..	..	..	..	..	..	..
277	..	..	✻	..	..	..	..	..	..	..	..	..
277	..	..	..	✻	✻	✻	..	✻	✻	..	..	..
277	..	..	..	..	..	..	✻	..	..	..	..	..
277	..	..	..	..	..	..	..	..	..	✻	..	..
277	..	..	..	..	..	..	..	..	..	..	✻	..
278	✻	✻	✻	✻	✻	✻	✻	✻	✻	✻	✻	..
279	✻	✻	✻	✻	✻	✻	✻	✻	✻	✻	✻	..
N.I.	✻	✻	✻	✻	✻	✻	✻	✻	✻	✻	✻	..
280	✻	✻	✻	✻	✻	✻	✻	✻	✻	✻	✻	..
281	✻	✻	✻	✻	✻	✻	✻	✻	✻	✻	✻	..
282	✻	✻	✻	✻	✻	✻	✻	✻	✻	✻	✻	..
283	✻	✻	✻	✻	✻	✻	✻	✻	✻	✻	✻	O
284	✻	✻	..	..	..	..	..	..	..	..	..	..
284	✻	✻	..	..	..	..	..	..	..	..	..	..
284	..	..	..	..	..	..	..	..	..	..	✻	..

This scan is explicit for non-commercial use and is not intended for financial or material gain by anyone

Whe. Ordering Quote Description and Part Number from Correct Column for your Horse Power and Model.

Illustration No.	DESCRIPTION OF PART.	Price. £ s. d.	PART NUMBER 9.96 h.p.	3.49 h.p.	4.98 h.p.	2.48 h.p.
	Front Mudguard.					
	Front Mudguard complete less Stays ..	1 2 6	MA1	..	..	..
	Front Mudguard complete less Stays ..	17 6	..	MA20	..	..
	Front Mudguard complete less Stays ..	8 6	..	MA40	..	..
285	Front Mudguard Blade only	6 0	..	MA60	..	..
	Front Mudguard complete less Stays ..	18 6	..	..	MA80	..
	Front Mudguard Blade only	8 6	..	..	MA100	..
	Front Mudguard Blade only	8 6	..	..	..	MA120
	Stays for Front Mudguard .. pair..	1 9	MA200	..	..	..
	Stays for Front Mudguard (Short) pair..	1 9	..	MA220	..	MA220
	Stays for Front Mudguard (Short) pair..	1 9	..	..	MA240	..
	Stays for Front Mudguard (Long) pair..	2 6	..	..	..	MA260
286	Front Mudguard Stay (Front) pair..	2 6	..	..	MA280	..
	Front Mudguard Stay (Rear) pair..	2 6	..	..	MA300	..
	Front Mudguard Stay (Front) pair..	2 6	..	MA320	..	..
	Front Mudguard Stay (Rear) pair..	2 6	..	MA340	..	..
	Pin for Fork End of Front Mudguard Stay 5 16 x ⅝ x 20 ..	2	K559	..	..	..
	Pin for Fork End of Front Mudguard Stay ¼ x ⅝ x 20 ..	2	..	MA380	MA380	..
	Pin for Fork End of Front Mudguard Stay ¼ x ½ x 20 ..	2	..	MA400	MA400	..
N.I.	Pin for Fork End of Front Mudguard Stay ¼ x ¾ x 20 ..	2	..	..	..	MA420
	Pin for Rear Stay for Fork End, 5 16 x ½ x 20	2	..	ZA7870	ZA7870	..
	Washer for Stay Pin, 5 16 Single Spring ..	1	K299	H163	ZA6040	..
	Washer for Stay Pin, ¼ Single Spring ..	1	..	MA500	MA500	F155
287	Pin for Front Mudguard Stay, ¼ x ⅝ x 20 ..	2	K924	..	MA380	..
	Pin for Front Mudguard Stay, ¼ x ½ x 20 ..	2	..	MA400	MA400	..
N.I.	Washer for Front Mudguard Stay Pin ¼ Plain	1	K111	H134	G27-2	..
	Washer for Front Mudguard Stay Pin ¼ Single Spring ..	1	MA500	MA500	MA500	..

NOT Whe. ✲ Indicates models for which Part is suitable. ✲ occurs in more than one column in same line Part is interchangeal.

MODELS M1 Twin	M2 Twin	M3 s.v.	M4 s.v.	M5 s.v.	M6 o.h.v.	M7 o.h.c.	M8 o.h.v.	M9 s.v.	M10 o.h.c.	M12 s.v.	For Dealer's Use.
✲	✲	..	..	..	..	..	..	..	..	..	..
..	..	✲	✲	..	..	..	..	..	..	..	..
..	..	..	..	✲	✲	..	..	..	..	..	..
..	..	..	..	..	..	✲	..	..	..	..	..
..	..	..	..	..	..	..	✲	✲	..	..	..
..	..	..	..	..	..	..	..	..	✲	..	..
..	..	..	..	..	..	..	..	..	..	✲	..
✲	✲	..	..	..	..	..	..	..	..	..	..
..	..	✲	✲	✲	✲	..	..	..	..	✲	..
..	..	..	..	..	..	..	✲	✲	..	..	..
..	..	..	..	..	..	..	..	..	..	✲	..
..	..	..	..	..	..	..	..	..	✲	..	..
..	..	..	..	..	..	..	..	..	✲	..	..
..	..	..	..	..	..	✲	..	..	..	..	..
..	..	..	..	..	..	✲	..	..	..	..	..
✲	✲	..	..	..	..	..	..	..	..	..	O
..	..	✲	✲	✲	✲	..	✲	✲	..	..	..
..	..	..	..	..	..	✲	..	..	✲	..	..
..	..	..	..	..	..	..	..	..	..	✲	..
..	..	..	..	..	..	✲	..	..	✲	..	..
✲	✲	..	..	..	..	✲	..	..	✲	..	O
..	..	✲	✲	✲	✲	..	✲	✲	..	✲	..
✲	✲	..	..	..	..	..	✲	✲	..	..	O
..	..	✲	✲	✲	✲	✲	..	..	✲	..	..
✲	✲	✲	✲	✲	✲	✲	✲	✲	✲	..	O
✲	✲	✲	✲	✲	✲	✲	✲	✲	✲	..	..

This scan is explicit for non-commercial use and is not intended for financial or material gain by anyone

When ordering Quote Description and Part Number from Correct Column for your Horse Power and Model.

NOTE When * Indicates models for which Part is suitable. occurs in more than one column in same line Part is interchangeable.

Illustration No.	DESCRIPTION OF PART.	Price. £ s d.	PART NUMBER 9.96 h.p.	3.49 h.p.	4.98 h.p.	2.48 h.p.	MODELS M1 Twin	M2 Twin	M3 s.v.	M4 s.v.	M5 s.v.	M6 o.h.v	M7 o.h.c.	M8 o.h.v.	M9 s.v.	M10 o.h.c.	M12 s.v.	For Dealer's Use
	Front Mudguard (Continued).																	
	Nut for Front Mudguard Stay ¼ x 20 x 3/16 x 7/16	1	K110	H133	G27-1	F34	*	*	*	*	*	*	*	*	*	*	*	O
	Bridge Plate for Front Mudguard	5	K923	..	G278-2	..	*	*	..	..	..	..	..	*	*	*	..	O
	Bridge Plate for Front Mudguard	4	..	H901	..	F415	..	..	*	*	*	*	*	..	..	..	*	O
	Pin for Bridge Plate, ¼ x ⅜ x 20	2	MA420	..	MA420	..	*	*	..	..	..	..	..	*	*	*	..	..
	Pin for Bridge Plate, ¼ x ⅝ x 20	2	..	MA380	..	MA380	..	..	*	*	*	*	*	..	..	..	*	..
	Washer for Bridge Plate Pin, ¼ Plain	1	K111	H134	G27-2	F35	*	*	*	*	*	*	*	*	*	*	*	O
N.I.	Washer for Bridge Plate Pin, ¼ Single Spring	1	MA500	MA500	MA500	MA500	*	*	*	*	*	*	*	*	*	*	*	..
	Nut for Bridge Plate Pin, ¼ x 20 x 3/16 x 7/16	1	K110	H133	G27-1	F34	*	*	*	*	*	*	*	*	*	*	*	O
	Bridge Piece for Front Mudguard	8	..	MA800	..	..	..	..	..	..	*	*	..	..	..	..	..	.
	Bridge Piece for Front Mudguard	8	..	..	..	MA820	..	..	..	..	..	..	..	..	..	..	*	..
	Pin for Bridge Piece, 3/16 x ⅜ x 24	1	..	H413	..	F126	..	..	..	..	*	*	..	..	..	..	*	O
	Washer for Pin for Bridge Piece 3/16 Single Spring	1	..	ZA7760	..	ZA7760	..	..	..	..	*	*	..	..	..	..	*	O
	Nut for Pin for Bridge Piece 3/16 x 24 x 5/32 x 11/32	1	..	MA900	..	MA900	..	..	..	..	*	*	..	..	..	..	*	..
	Rear Mudguard.																	
	Rear Mudguard	19 0	MA1000	..	..	..	*	..	..	..	..	..	..	..	..	..	..	..
	Rear Mudguard	12 0	MA1020	..	MA1020	..	..	*	..	..	..	..	..	*	*	..	..	..
	Rear Mudguard	10 6	..	MA1040	..	..	..	..	*	*	*	*	..	..	..	..	..	..
288	Rear Mudguard	7 6	..	MA1060	..	..	..	..	..	..	..	..	*	..	..	..	..	..
	Rear Mudguard	7 6	..	..	MA1080	..	..	..	..	..	..	..	..	..	..	*	..	..
	Rear Mudguard	9 6	..	..	..	MA1100	..	..	..	..	..	..	..	..	..	..	*	..
	Inside Strap for Stand Clip NOTE.—This Strap is suitable for all Models from 1919 to 1929.	1 6	MA1200	MA1200	MA1200	..	*	*	*	*	*	*	*	*	*	*	..	..
N.I.	Inside Strap for Stand Clip NOTE.—This Strap is suitable for K12 Model also.	1 6	..	..	..	MA1220	..	..	..	..	..	..	..	..	..	..	*	..

This scan is explicit for non-commercial use and is not intended for financial or material gain by anyone

W. Ordering Quote Description and Part Number from Correct Column for your Horse Power and Model.

NOTE When ✻ Indicates models for which Part is suitable. occurs in more than one column in same line Part is interchangeal

Illustration No.	DESCRIPTION OF PART.	Price. £ s. d.	PART NUMBER 9.96 h.p.	3.49 h.p.	4.98 h.p.	2.48 h.p.	M1 Twin	M2 Twin	M3 s.v.	M4 s.v.	M5 s.v.	M6 o.h.v.	M7 o.h.c.	M8 o.h.v.	M9 s.v.	M10 o.h.c.	M12 s.v.	For Dealer's Use.
	Rear Mudguard (Continued).																	
289	Outside Strap for Stand Clip	1 9	..	H878	..	..	..	..	..	..	..	..	✻	..	..	..	..	..
	Outside Strap for Stand Clip	2 6	..	..	MA1320	..	..	..	..	..	..	..	..	..	✻	..	..	..
	Spiral Spring for Stand Clip	1	K899	H880	G333-2	F402	✻	✻	✻	✻	✻	✻	✻	✻	✻	✻	✻	O
	Washer for Spiral Spring for Stand Clip 3/16 Plain ..	1	ZA2230	ZA2230	ZA2230	ZA2230	✻	✻	✻	✻	✻	✻	✻	✻	✻	✻	✻	O
	Nut for Spiral Spring for Stand Clip 3/16 x 24 x 5/32 x 11/32 ..	1	MA900	MA900	MA900	MA900	✻	✻	✻	✻	✻	✻	✻	✻	✻	✻	✻	..
	Pin for Stand Strap ¼ x ⅛ x 20	2	MA1400	MA1400	MA1400	MA1400	✻	✻	✻	✻	✻	✻	..	✻	✻	..	✻	O
	Nut for Stand Strap Pin, ¼ x 20 x 3/16 x 7/16 ..	1	K110	H133	G27-1	F34	✻	✻	✻	✻	✻	✻	..	✻	✻	..	✻	O
	Washer for Stand Strap Pin ¼ Single Spring (Square)	1	MA1440	MA1440	MA1440	MA1440	✻	✻	✻	✻	✻	✻	..	✻	✻	..	✻	..
	Long Strap inside Mudguard	1 6	MA1500	..	MA1500	..	✻	✻	..	..	..	..	..	✻	✻	..	..	..
N.I.	Long Strap inside Mudguard	1 6	..	MA1520	..	..	..	..	✻	✻	✻	✻	..	..	..	..	..	..
	Long Strap inside Mudguard	1 6	..	MA1540	..	..	..	..	..	..	..	..	✻	..	..	..	..	..
	Long Strap inside Mudguard	1 6	..	..	MA1560	..	..	..	..	..	..	..	..	..	..	✻	..	..
	Long Strap inside Mudguard	1 6	..	..	..	MA1580	..	..	..	..	..	..	..	..	..	..	✻	..
	Pin for Long Strap inside Mudguard ¼ x ⅛ x 20 ..	2	MA1600	MA1600	MA1600	MA1600	✻	✻	✻	✻	✻	✻	✻	✻	✻	✻	✻	O
	Nut for Pin for Long Strap ¼ x 20 x 3/16 x 7/16	1	K110	H133	G27-1	F34	✻	✻	✻	✻	✻	✻	✻	✻	✻	✻	✻	O
	Washer for Pin for Long Strap ¼ Single Spring (Square)	1	MA1440	MA1440	MA1440	MA1440	✻	✻	✻	✻	✻	✻	✻	✻	✻	✻	✻	..
	Pin for Mudguard Bottom Bracket 5/16 x ⅜ x 20 ..	2	K559	H537	G173-8	RA3140	✻	✻	✻	✻	✻	✻	✻	✻	✻	✻	✻	O
	Washer for Pin for Mudguard Bottom Bracket 5/16 Single Spring	1	K299	H163	ZA6040	F77	✻	✻	✻	✻	✻	✻	✻	✻	✻	✻	✻	O
290	Pin for Mudguard Seat Stay Clip, ¼ x ⅜ x 20 ..	2	K924	MA380	MA380	MA380	✻	✻	✻	✻	✻	✻	✻	✻	✻	✻	✻	O
	Nut for Mudguard Seat Stay Clip .. .. ¼ x 20 x 3/16 x 7/16	1	K110	H133	G27-1	F34	✻	✻	✻	✻	✻	✻	✻	✻	✻	✻	✻	O
	Washer for Mudguard Seat Stay Clip ¼ Single Spring (Square) ..	1	MA1440	MA1440	MA1440	MA1440	✻	✻	✻	✻	✻	✻	✻	✻	✻	✻	✻	O
	Mudguard Stay with Lifting Handle ..	7 6	..	MA1800	..	..	..	..	..	..	..	..	✻	..	..	..	..	..
	Mudguard Stay with Lifting Handle ..	7 6	..	..	MA1820	..	..	..	..	..	..	..	..	..	..	✻	..	..
N.I.	Mudguard Stay without Lifting Handle (L.H.)	1 6	..	MA1840	..	..	..	..	..	..	..	..	✻	..	..	..	..	..
	Mudguard Stay without Lifting Handle (L.H.)	1 6	..	..	MA1860	..	..	..	..	..	..	..	..	..	..	✻	..	..
	Mudguard Stay without Lifting Handle (R.H.)	1 6	..	MA1880	..	..	..	..	..	..	..	..	✻	..	..	..	..	..
	Mudguard Stay without Lifting Handle (R.H.)	1 6	..	..	MA1900	..	..	..	..	..	..	..	..	..	..	✻	..	..

This scan is explicit for non-commercial use and is not intended for financial or material gain by anyone

When Ordering Quote Description and Part Number from Correct Column for your Horse Power and Model.

NO * Indicates models for which Part is suitable.
When * occurs in more than one column in same line Part is interchangeable.

Illustration No.	DESCRIPTION OF PART.	Price. £ s. d.	PART NUMBER 9.96 h.p.	3.49 h.p.	4.98 h.p.	2.48 h.p.	MODELS M1 Twin	M2 Twin	M3 s.v.	M4 s.v.	M5 s.v.	M6 o.h.v.	M7 o.h.c.	M8 o.h.v.	M9 s.v.	M10 o.h.c.	M12 s.v.	For Dealer's Use.
	Rear Mudguard (Continued).																	
	Pin for Mudguard Stay, ¼ x ½ x 20	2	..	MA1800	MA1800	..	..	..	..	..	..	..	*	..	..	*	..	O
N.I	Nut for Pin for Mudguard Stay .. .. ¼ x 20 x 3/16 x 7/16	1	..	H133	G27-1	..	..	..	..	..	..	..	*	..	..	*	..	O
	Washer for Pin for Mudguard Stay .. ¼ Single Spring (Square)	1	..	MA1440	MA1440	..	..	..	..	..	..	..	*	..	..	*	..	O
	Front Stand.																	
	Front Wheel Stand only	16 9	MA2100	..	..	..	*	*	..	..	..	..	..	..	..	..	..	..
291	Front Wheel Stand only	12 0	..	H856	..	..	..	..	*	*	..	..	..	..	..	..	..	O
	Front Wheel Stand only	12 0	..	MA2140	..	..	..	..	..	..	*	*	..	..	..	..	..	..
	Front Wheel Stand only	15 6	..	..	MA2160	..	..	..	..	..	..	..	..	*	*	..	..	..
	Stud only for Front Wheel Stand .. .. 5/16 x 20 shouldered x 1-19/32 long	3	K878	H857	..	..	*	*	..	..	*	*	..	..	..	..	..	O
N.I.	Stud only for Front Wheel Stand .. .. 5/16 x 20 shouldered x 1-7/32 long	3	..	MA2200	MA2200	..	..	..	*	*	..	..	..	*	*	..	..	..
	Washer only for Front Wheel Stand .. 5/16 Plain	1	ZA6830	ZA6830	ZA6830	..	*	*	*	*	*	*	*	*	*	..	..	O
	Nut only for Front Wheel Stand .. 5/16 x 20 x ¼ x 19/32	1	K707	H320	G212	..	*	*	*	*	*	*	..	*	*	..	..	O
	Pin to Fork End of Front Wheel Stand .. 5/16 x 1-1/32 x 20	3	MA2260	..	..	..	*	*	..	..	..	..	..	..	..	..	..	..
292	Pin to Fork End of Front Wheel Stand .. 5/16 x ¾ x 20	3	..	ZA8840	..	..	..	..	*	*	*	*	..	..	..	..	..	..
	Pin to Fork End of Front Wheel Stand .. 5/16 x 15/16 x 20	1	..	..	MA2300	..	..	..	..	..	..	..	..	*	*	..	..	..
N.I.	Nut to Fork End of Front Wheel Stand .. 5/16 x 20 x ¼ x 19/32	1	K707	..	G212	..	*	*	..	..	..	..	..	*	*	..	..	O
	Nut for Fork End of Front Wheel Stand .. 5/16 x 20 x 3/16 x 17/32	1	..	YA4360	..	..	..	..	*	*	*	*	..	..	..	..	..	O
	Rear Stand.																	
	Rear Wheel Stand only	1 8 9	MA2400	..	MA2400	..	*	*	..	..	..	..	..	*	*	*	..	..
293	Rear Wheel Stand only	17 3	..	MA2420	..	..	..	..	*	*	*	*	*	..	..	..	..	..
	Rear Wheel Stand only	16 0	..	..	..	F395	..	..	..	..	..	..	..	..	..	..	*	O
	Pin only for Rear Wheel Stand .. .. 9/16 x 1-3/16 x 20	3	K891	..	MA2460	..	*	*	..	..	..	..	..	*	*	*	..	O
294	Pin only for Rear Wheel Stand .. .. ½ x 1-1/16 x 20	3	..	H870	..	..	..	..	*	*	*	*	*	..	..	..	..	O
	Pin only for Rear Wheel Stand .. .. ½ x ¾ x 20	3	..	..	..	F396	..	..	..	..	..	..	..	..	..	..	*	O
	Nut only for Rear Wheel Stand .. .. 9/16 x 20 x 3/16 x 13/16	2	K223	..	G44	..	*	*	..	..	..	..	..	*	*	*	..	O
N.I.	Nut only for Rear Wheel Stand .. .. ½ x 20 x 7/32 x 13/16	2	..	H871	..	..	..	..	*	*	*	*	*	..	..	..	..	O
							..	..	..	..	..	..	..	..	..	..	*	O

This scan is explicit for non-commercial use and is not intended for financial or material gain by anyone

W! Ordering Quote Description and Part Number from Correct Column for your Horse Power and Model.

NOTE When ✻ Indicates models for which Part is suitable. occurs in more than one column in same line Part is interchangea

Illustration No.	DESCRIPTION OF PART.	Price. £ s. d.	PART NUMBER 9.96 h.p.	3.49 h.p.	4.98 h.p.	2.48 h.p.	MODELS M1 Twin	M2 Twin	M3 s.v.	M4 s.v.	M5 s.v.	M6 o.h.v.	M7 o.h.c.	M8 o.h.v.	M9 s.v.	M10 o.h.c.	M12 s.v.	For Dealer's Use.
	Carriers.																	
	Carrier	2 6 0	MA2600	..	MA2600	..	✻	✻	..	..	..	..	..	✻	✻	..	..	..
295	Carrier	1 17 6	..	MA2620	..	..	..	..	✻	✻	✻	✻	..	..	..	..	..	..
	Carrier	1 4 3	..	..	..	MA2640	..	..	..	..	..	..	..	..	..	..	✻	..
296	End Pins for fixing Carrier, 3/8 x 11/16 x 20	2	K1005	..	G62	..	✻	✻	..	..	..	..	..	✻	✻	✻	..	O
	End Pins for fixing Carrier, 3/16 x 1/4 x 20	2	..	ZA8840	..	F320	..	..	✻	✻	✻	✻	..	..	..	..	✻	O
N.I.	Washer for Pins for Carrier, 3/8 Single Spring	1	K300	..	G79-1	..	✻	✻	..	..	..	..	..	✻	✻	✻	..	O
	Washer for Pins for Carrier, 5/16 Single Spring	1	..	H163	..	F77	..	..	✻	✻	✻	✻	..	..	..	..	✻	O
	Number Plates.																	
297	Front Number Plate only	1 6	K950	H923	G277	F440	✻	✻	✻	✻	✻	✻	✻	✻	✻	✻	✻	O
298	Clips for Front Number Plate .. pair	1 4	K951	H924	G278	F441	✻	✻	✻	✻	✻	✻	✻	✻	✻	✻	✻	O
299	Pin for Clip for Front Number Plate 3/16 x 1/2 x 24	1	K429	H413	G121-1	F126	✻	✻	✻	✻	✻	✻	✻	✻	✻	✻	✻	O
N.I.	Nut for Clip for Front Number Plate 3/16 x 24 x 5/32 x 11/32	1	MA900	MA900	MA900	MA900	✻	✻	✻	✻	✻	✻	✻	✻	✻	✻	✻	O
	Washer for Clip for Front Number Plate 3/16 Single Spring	1	ZA7760	ZA7760	ZA7760	ZA7760	✻	✻	✻	✻	✻	✻	✻	✻	✻	✻	✻	O
N.I.	Pin for holding Front Number Plate into Clip 3/16 x 1/2 x 24	1	K429	H413	G121-1	F126	✻	✻	✻	✻	✻	✻	✻	✻	✻	✻	✻	O
	Nut for holding Front Number Plate into Clip 3/16 x 24 x 5/32 x 11/32	1	MA900	MA900	MA900	MA900	✻	✻	✻	✻	✻	✻	✻	✻	✻	✻	✻	O
	Rear Number Plate only	1 6	K953	H926	G280	F443	✻	✻	✻	✻	✻	✻	✻	✻	✻	✻	✻	O
	Rear Number Plate only for Electric Lamp	1 6	K954	H927	G280-1	F444	✻	✻	✻	✻	✻	✻	✻	✻	✻	✻	✻	O
N.I.	Pin for Rear Number Plate 1/4 x 1/2 x 20	1	MA400	MA400	MA400	MA400	✻	✻	✻	✻	✻	✻	..	✻	✻	..	✻	O
	Pin for Rear Number Plate, 1/4 x 3/8 x 20	1	..	MA380	MA380	..	..	..	..	..	..	..	✻	..	..	✻	..	..
	Nut for Pin for Rear Number Plate 1/4 x 20 x 3/16 x 7/16	1	K110	H133	G27-1	F34	✻	✻	✻	✻	✻	✻	✻	✻	✻	✻	✻	O
	Washer for Nut for Rear Number Plate 1/4 Single Spring	1	MA500	MA500	MA500	MA500	✻	✻	✻	✻	✻	✻	✻	✻	✻	✻	✻	O
	Pannier Tool Cases.																	
	Pannier Tool Case, with fittings	8 0	K1011	..	G282	..	✻	✻	..	..	..	..	..	✻	✻	..	..	O
	Pannier Tool Case, with fittings	6 0	..	H965	..	F470	..	..	✻	✻	✻	✻	..	..	..	..	✻	O
300	Pannier Tool Case only	6 3	K1013	..	G282-1	..	✻	✻	..	..	..	..	..	✻	✻	..	..	O
	Pannier Tool Case only	5 3	..	H967	..	F471	..	..	✻	✻	✻	✻	..	..	..	..	✻	O

This scan is explicit for non-commercial use and is not intended for financial or material gain by anyone

Wh)rdering Quote Description and Part Number from Correct Column for your Horse Power and Model.

NO ✻ Indicates models for which Part is suitable.
W ✻ occurs in more than one column in same line Part is intercha ble.

Illustration No.	DESCRIPTION OF PART.	Price £ s. d.	PART NUMBER 9.96 h.p.	3.49 h.p.	4.98 h.p.	2.48 h.p.	MODELS M1 Twin	M2 Twin	M3 s.v.	M4 s.v.	M5 s.v.	M6 o.h.v.	M7 o.h.c.	M8 o.h.v.	M9 s.v.	M10 o.h.c.	M12 s.v.	For Dealers Use.
	Pannier Tool Cases (Continued).																	
	Plate only for Pannier Tool Case Fitting (long)	3	K1017	..	G283-3	F472	✻	✻	..	..	..	..	..	✻	✻	..	✻	O
	Plate only for Pannier Tool Case Fitting ..	3	..	H973	..	..	..	..	✻	✻	✻	✻	..	..	..	..	..	O
	Pin for Plate for Pannier Tool Case Fitting .. ⅛ x ⅜ x 20	2	K924	MA380	MA380	MA380	✻	✻	✻	✻	✻	✻	..	✻	✻	..	✻	O
N.I.	Nut for Plate for Pannier Tool Case Fitting .. ⅛ x 20 x 3/16 x 7/16	1	K110	H133	G27-1	F34	✻	✻	✻	✻	✻	✻	..	✻	✻	..	✻	O
	Washer for Plate for Pannier Tool Case Fitting ⅛ Single Spring	1	MA500	MA500	MA500	MA500	✻	✻	✻	✻	✻	✻	..	✻	✻	..	✻	O
	Washer for Plate for Pannier Tool Case Fitting ¼ Plain	1	K111	H134	G27-2	F35	✻	✻	✻	✻	✻	✻	..	✻	✻	..	✻	O
	Tank Tool Box, with Pins	19 0	..	H975-1	G283-4	..	..	..	..	..	..	..	✻	..	..	✻	..	O
	Pins only for Tank Tool Box .. .. ⅛ x ⅜ x 20	2	..	H537	G270	..	..	..	..	..	✻	✻	✻	..	..	✻	..	O
	Tanks and Fittings.																	
	NOTE—The Standard Models for M5 and M12 are without Speedometers. Tanks are not fitted for same																	
	Petrol Tank less fittings	4 12 0	TA1	..	..	..	✻	✻	..	..	..	..	..	..	..	..	..	..
	Petrol Tank less fittings	3 14 9	..	TA20	..	..	..	..	✻	✻	..	✻	..	..	..	..	..	..
	Petrol Tank less fittings	3 14 9	..	TA40	..	..	..	..	..	..	✻	..	..	..	.	..	..	..
301	Petrol Tank less fittings	4 12 0	..	..	TA60	..	..	..	..	..	..	..	..	✻	✻	..	..	..
	Petrol Tank and fittings	3 14 9	..	TA80	..	..	..	..	..	..	..	..	✻	..	..	..	..	..
	Petrol Tank and fittings	4 12 0	..	..	TA90	..	..	..	..	..	..	..	..	..	..	✻	..	..
	Petrol Tank less fittings	3 0 0	..	..	..	TA100	..	..	..	..	..	..	..	..	..	..	✻	..
	Felt Pad for Tank supports	3	TA120	TA120	TA120	TA120	✻	✻	✻	✻	✻	✻	✻	✻	✻	✻	✻	..
N.I.	Pins for fixing Tank to Frame, "O" B.A. x ⅜	2	TA140	TA140	TA140	TA140	✻	✻	✻	✻	✻	✻	✻	✻	✻	✻	✻	..
	Washer for fixing Tank to Frame .. .. ⅛ Single Spring	1	MA500	MA500	MA500	MA500	✻	✻	✻	✻	✻	✻	✻	✻	✻	✻	✻	..
	Washer for fixing Tank to Frame ⅛ Plain ..	1	K111	H134	G27-2	F35	✻	✻	✻	✻	✻	✻	✻	✻	✻	✻	✻	O
	Petrol Filler Cap	1 2	TA180	TA180	TA180	TA180	✻	✻	✻	✻	✻	✻	✻	✻	✻	✻	✻	..
N.I.	Leather Washer for Petrol Filler Cap ..	2	TA200	TA200	TA200	TA200	✻	✻	✻	✻	✻	✻	✻	✻	✻	✻	✻	..
	Anti-splasher Disc for Petrol Filler Cap ..	3	TA220	TA220	TA220	TA220	✻	✻	✻	✻	✻	✻	✻	✻	✻	✻	✻	..
303	Petrol Tap (Non Filter Type) ..	2 0	TA240	TA240	TA240	TA240	✻	✻	✻	✻	✻	✻	✻	✻	✻	✻	✻	..
N.I.	Washer for Petrol Tap (Fibre) ..	1	TA260	TA260	TA260	TA260	✻	✻	✻	✻	✻	✻	✻	✻	✻	✻	✻	..

This scan is explicit for non-commercial use and is not intended for financial or material gain by anyone

Wh Ordering Quote Description and Part Number from Correct Column for your Horse Power and Model.

NOTE ✻ indicates models for which Part is suitable.
When \ occurs in more than one column in same line Part is interchange

Illustration No.	DESCRIPTION OF PART.	Price. £ s. d.	PART NUMBER 9.96 h.p.	3.49 h.p.	4.98 h.p.	2.48 h.p.	MODELS M1 Twin	M2 Twin	M3 s.v.	M4 s.v.	M5 s.v.	M6 o.h.v.	M7 o.h.c.	M8 o.h.v.	M9 s.v.	M10. o.h.c.	M12 s.v.	For Dealer's Use.
	Tanks and Fittings (Continued).																	
304	Oil Tank less fittings	1 5 0	TA300	..	..	..	✻	✻	..	..	..	..	..	..	..	..	..	..
	Oil Tank less fittings	1 5 0	..	TA320	..	..	..	..	✻	✻	✻	✻	✻	..	..	..	..	..
	Oil Tank less fittings	1 5 0	..	..	TA340	..	..	..	..	..	..	..	..	✻	✻	✻	..	..
	Oil Tank less fittings	1 3 0	..	..	..	TA360	..	..	..	..	..	..	..	..	..	..	✻	..
305	Oil Filler Cap	1 3	K1030	H999	G292	F485	✻	✻	✻	✻	✻	✻	✻	✻	✻	✻	✻	O
	Leather Washer for Oil Filler Cap ..	2	K1031	H1000	G292-2	F486	✻	✻	✻	✻	✻	✻	✻	✻	✻	✻	✻	O
	Anti-splasher Disc for Oil Filler Cap ..	3	K1022	H1001	G292-1	F487	✻	✻	✻	✻	✻	✻	✻	✻	✻	✻	✻	O
	Felt Pad for Oil Tank	6	TA440	TA440	TA440	TA440	✻	✻	✻	✻	✻	✻	✻	✻	✻	✻	✻	..
N.I.	Pins for fixing Oil Tank "O" B.A. x ¾ ..	2	TA140	TA140	TA140	TA140	✻	✻	✻	✻	✻	✻	✻	✻	✻	✻	✻	..
	Washer for fixing Oil Tank ¼ Single Spring	1	MA500	MA500	MA500	MA500	✻	✻	✻	✻	✻	✻	✻	✻	✻	✻	✻	..
	Washer for fixing Oil Tank ¼ Plain ..	1	K111	H134	G27-2	F35	✻	✻	✻	✻	✻	✻	✻	✻	✻	✻	✻	O
302	Knee Grips .. .. .. per pair	4 0	TA500	TA500	TA500	..	✻	✻	✻	✻	✻	✻	✻	✻	✻	✻	..	..
	Knee Grips .. .. .. per pair	4 0	..	..	..	TA520	..	..	..	..	..	..	..	..	..	..	✻	..
N.I.	Plates for Knee Grips .. .. each	6	TA540	TA540	TA540	..	✻	✻	✻	✻	✻	✻	✻	✻	✻	✻	..	..
	Plates for Knee Grips .. .. each	6	..	..	..	TA560	.	..	..	..	..	..	..	..	..	..	✻	..
	Petrol and Oil Pipes.																	
306	Petrol Pipe from Tank to Carburetter with Nipples and Unions	5 9	TA600	..	..	..	✻	✻	..	..	..	..	..	..	..	..	..	..
	Petrol Pipe from Tank to Carburetter with Nipples and Unions	4 3	..	TA620	..	..	..	..	✻	✻	✻	✻	✻	..	..	..	..	..
	Petrol Pipe from Tank to Carburetter with Nipples and Unions	4 3	..	..	TA640	..	..	..	..	..	..	..	..	✻	✻	✻	..	..
	Petrol Pipe from Tank to Carburetter with Nipples and Unions	4 3	..	..	..	TA660	..	..	..	..	..	..	..	..	..	..	✻	..
307	"U" Pipe, connecting Tank Halves with Nipples and Unions	4 0	TA680	..	..	TA680	✻	✻	..	..	..	..	..	..	..	..	✻	..
	"U" Pipe, connecting Tank Halves with Nipples and Unions	4 0	..	TA700	..	..	..	..	✻	✻	✻	✻	✻	..	..	..	..	..
	"U" Pipe, connecting Tank Halves with Nipples and Unions	4 0	..	..	TA720	..	..	..	..	..	..	..	..	✻	✻	✻	..	..
308	Nipple only. ¼ in.	4	TA740	TA740	TA740	TA740	✻	✻	✻	✻	✻	✻	✻	✻	✻	✻	✻	..
309	Union Nut only. ¼ in.	3	TA760	TA760	TA760	TA760	✻	✻	✻	✻	✻	✻	✻	✻	✻	✻	✻	..

This scan is explicit for non-commercial use and is not intended for financial or material gain by anyone

When ...lering Quote Description and Part Number from Correct Column for your Horse Power and Model.

Illustration No	DESCRIPTION OF PART.	Price. £ s. d.	PART NUMBER 9.96 h.p.	3.49 h.p.	4.98 h.p.	2.48 h.p.
	Petrol and Oil Pipes (Continued).					
310	Oil Pipe from Tank to Pump, with Nipples and Unions (long)	5 6	TA840	TA840	TA840	TA840
311	Oil Pipe from Tank to Pump with Nipples and Unions (short)	4 9	TA860	TA860	TA860	TA860
312	Rubber Connection for Oil Pipes	8	TA880	TA880	TA880	TA880
313	Oil Delivery Pipe from Pump to Driving Side of Engine, with Nipples and Unions	6 6	TA900	..	..	..
	Oil Delivery Pipe from Pump to Driving Side of Engine, with Nipples and Unions	6 6	..	TA920	..	..
	Oil Delivery Pipe from Pump to Driving Side of Engine, with Nipples and Unions	6 6	..	..	TA940	..
	Oil Delivery Pipe from Pump to Driving Side of Engine, with Nipples and Unions	6 6	..	..	..	TA960
N.I.	Nipple only, ¼ in.	3	TA740	TA740	TA740	TA740
	Union Nut only, ¼ in.	4	TA760	TA760	TA760	TA760
	Screwed Connection for Oil Delivery Pipe ..	10	K270	H326	G72-2	ZA6140
	Washer for Screwed Connection for Oil Delivery Pipe (fibre)	2	TA260	TA260	TA260	TA260
	Timing Side Release Pipe from Magneto Chain Cover, with Nipples and Unions	1 0	ZA6100	ZA6100	ZA6100	ZA6100
	Oil Release Pipe with Nipple and Union ..	2 0	K259	..	..	..
	Oil Release Pipe with Nipple and Union ..	2 0	..	ZA6070	ZA6070	ZA6070
	Filter for Oil Tank	1 9	TA1120	TA1120	TA1120	TA1120
314	Suction Oil Pipe from Crankcase to Pump	2 0	TA1140	..	..	..
	Suction Oil Pipe from Crankcase to Pump	2 0	..	TA1150	..	..
	Suction Oil Pipe from Crankcase to Pump	2 0	..	..	TA1160	..
	Suction Oil Pipe from Crankcase to Pump	1 6	..	..	..	TA1170
	Speedometers.					
	All Models except M7 and M10 are fitted with 80 M.P.H. Type. M7 and M10 are fitted with 100 M.P.H. Type. The Tanks fitted as standard to M5 and M12 Models are not suitable for Speedometers.					
N.I.	Speedometer, complete with Cable and Gearbox (Trip Type) (Wide Ratio)	2 5 0	TA1200	..	..	..
	Speedometer, complete with Cable and Gearbox (Trip Type) (Wide Ratio)	2 5 0	..	TA1220	TA1220	..
	Speedometer, complete with Cable and Gearbox (Trip Type) (Close Ratio)	2 5 0	..	TA1240	..	..

NOTE ✻ Indicates models for which Part is suitable.
Whe ✻ occurs in more than one column in same line Part is interchangeabl

M1 Twin	M2 Twin	M3 s.v.	M4 s.v.	M5 s.v.	M6 o.h.v.	M7 o.h.c.	M8 o.h.v.	M9 s.v.	M10 o.h.c.	M12 s.v.	For Dealer's Use.
✻	✻	✻	✻	✻	✻	✻	✻	✻	✻	✻	..
✻	✻	✻	✻	✻	✻	✻	✻	✻	✻	✻	..
✻	✻	✻	✻	✻	✻	✻	✻	✻	✻	✻	..
✻	✻	..	..	..	..	..	..	..	..	..	..
..	..	✻	✻	✻	✻	✻	..	..	..	..	..
..	..	..	..	..	..	..	✻	✻	✻	..	..
..	..	..	..	..	..	..	..	..	..	✻	..
✻	✻	✻	✻	✻	✻	✻	✻	✻	✻	✻	..
✻	✻	✻	✻	✻	✻	✻	✻	✻	✻	✻	..
✻	✻	✻	✻	✻	✻	✻	✻	✻	✻	✻	O
✻	✻	✻	✻	✻	✻	✻	✻	✻	✻	✻	..
✻	✻	✻	✻	✻	✻	✻	✻	✻	✻	✻	..
✻	✻	..	..	..	..	..	..	..	..	..	O
..	..	✻	✻	✻	✻	✻	✻	✻	✻	✻	..
✻	✻	✻	✻	✻	✻	✻	✻	✻	✻	✻	..
✻	✻	..	..	.	..	..	..	..	..	..	..
..	..	✻	✻	✻	✻	✻	..	..	..	..	..
..	..	..	..	..	..	..	✻	✻	✻	..	..
..	..	..	..	..	..	..	..	..	..	✻	..
✻	✻	..	..	..	..	..	..	..	..	..	.. +
..	..	✻	✻	..	..	..	✻	✻	..	..	.. +
..	..	..	..	..	✻	..	..	..	..	..	.. +

This scan is explicit for non-commercial use and is not intended for financial or material gain by anyone

Wher dering Quote Description and Part Number from

Correct Column for your Horse Power and Model.

NOTE * Indicates models for which Part is suitable.
When occurs in more than one column in same line Part is interchangeable.

Illustration No.	DESCRIPTION OF PART.	Price. £ s. d.	PART NUMBER 9.96 h.p.	3.49 h.p.	4.98 h.p.	2.48 h.p.	MODELS M1 Twin	M2 Twin	M3 s.v.	M4 s.v.	M5 s.v.	M6 o.h.v.	M7 o.h.c.	M8 o.h.v.	M9 s.v.	M10 o.h.c.	M12 s.v.	For Dealer's Use.
	Speedometers—Continued.																	
	Speedometer complete with Cable and Gearbox (Trip Type) (Close Ratio) (100 mile type)	2 11 0	..	TA1250	TA1250	..	..	..	..	..	..	..	*	..	..	*	..	.. †
	Speedometer. complete with Cable and Gearbox (Trip Type) (Close Ratio) (in Kilos)	2 14 0	..	TA1255	TA1255	..	..	..	..	..	..	..	*	..	..	*	..	.. †
	Speedometer, complete with Cable and Gearbox (Non-Trip Type) Wide Ratio)	2 0 0	TA1260	..	..	..	*	*	..	..	..	..	..	..	..	..	..	.. †
N.I.	Speedometer, complete with Cable and Gearbox (Non-Trip Type) (Wide Ratio)	2 0 0	..	TA1280	TA1280	..	..	..	*	*	..	..	..	*	*	..	..	.. †
	Speedometer, complete with Cable and Gearbox (Non-Trip Type) Close Ratio)	2 0 0	..	TA1300	..	..	..	..	..	..	..	*	..	..	..	..	..	.. †
	Speedometer, complete with Cable and Gearbox)Non-Trip Type) (Close Ratio) (100 mile type)	2 6 0	..	TA1310	TA1310	..	..	..	..	..	..	..	*	..	..	*	..	.. †
	Speedometer, complete with Cable and Gearbox (Non-Trip Type) (Close Ratio) (in Kilos)	2 9 0	..	TA1315	TA1315	..	..	..	..	..	..	..	*	..	..	*	..	.. †
	Speedometer Dial only (Trip Type)	1 10 0	TA1320	TA1320	TA1320	..	*	*	*	*	..	*	..	*	*	..	..	.. †
	Speedometer Dial only (Trip Type)	1 16 0	..	TA1330	TA1330	..	..	..	..	..	..	..	*	..	..	*	..	.. †
	Speedometer Dial only (Trip Type) (in Kilos)	1 19 0	..	TA1335	TA1335	..	..	..	..	..	..	..	*	..	..	*	..	.. †
315	Speedometer Dial only (Non-Trip Type)	1 5 0	TA1340	TA1340	TA1340	..	*	*	*	*	..	*	..	*	*	..	..	.. †
	Speedometer Dial only (Non-Trip Type)	1 11 0	..	TA1350	TA1350	..	..	..	..	..	..	*	..	..	..	*	..	.. †
	Speedometer Dial only (Non-Trip Type) (in Kilos)	1 14 0	..	TA1355	TA1355	..	..	..	..	..	..	*	..	..	..	*	..	.. †
	Gearbox complete (Wide Ratio)	7 6	TA1360	TA1360	TA1360	..	*	*	*	*	..	..	..	*	*	..	..	.. †
	Gearbox complete (Close Ratio)	7 6	..	TA1380	TA1380	..	..	..	..	..	..	*	*	..	..	*	..	.. †
	Screws for fixing Gearbox 3/16 x ½ x 24	1	K429	H413	G121-1	..	*	*	*	*	..	*	*	*	*	*	..	O
	Washers for Screws for Gearbox 3/16 (Single Spring)	1	ZA7760	ZA7760	ZA7760	..	*	*	*	*	..	*	*	*	*	*	..	O
	Outer Cable 2ft. 8in.	6 6	TA1440	..	..	..	*	*	..	..	..	..	..	..	..	..	..	.. †
	Outer Cable 2ft. 5in.	6 6	..	TA1460	TA1460	..	..	..	*	*	..	*	*	*	*	*	..	.. †
N.I.	Inner Cable	6 6	TA1480	..	..	..	*	*	..	..	..	..	..	..	..	..	..	.. †
	Inner Cable	6 6	..	TA1500	TA1500	..	..	..	*	*	..	*	*	*	*	*	..	.. †
	Stud to fix Speedometer Dial in Tank 5¾ long	2	TA1520	TA1520	..	..	*	*	*	*	..	*	*	..	..	..	..	.. †
	Stud to fix Speedometer Dial in Tank 5¼ long	2	..	..	TA1540	..	..	..	..	..	..	..	..	*	*	*	..	.. †
	Wing Nut to fix Speedometer Dial in Tank	1	TA1560	TA1560	TA1560	..	*	*	*	*	..	*	*	*	*	*	..	.. †
	Glass for Speedometer Dial	1 0	TA1580	TA1580	TA1580	..	*	*	*	*	..	*	*	*	*	*	..	.. †

This scan is explicit for non-commercial use and is not intended for financial or material gain by anyone

NOTE ✻ Indicates models for which Part is suitable.
Whe ✻ occurs in more than one column in same line Part is interchangeab'

Whe 'rdering Quote Description and Part Number from Correct Column for your Horse Power and Model.

Illustration No.	DESCRIPTION OF PART.	Price. £ s. d.	PART NUMBER 9.96 h.p.	3.49 h.p.	4.98 h.p.	2.48 h.p.	MODELS M1 Twin	M2 Twin	M3 s.v.	M4 s.v.	M5 s.v.	M6 o.h.v.	M7 o.h.c.	M8 o.h.v.	M9 s.v.	M10 o.h.c.	M12 s.v.	For Dealer's Use.
	Twist Grip Control Parts (BOWDEN).																	
N.I.	Twist Grip Control complete less Cable ..	9 6	K1150	H1110-1	G439-10	F559	✻	✻	✻	✻	✻	✻	✻	✻	✻	✻	✻	O †
316	Rubber Grip only (R.H.)	2 0	K1151	H1110-2	G439-11	F560	✻	✻	✻	✻	✻	✻	✻	✻	✻	✻	✻	O †
317	Rubber Grip only (L.H.)	2 0	K1152	H1110-3	G439-12	F561	✻	✻	✻	✻	✻	✻	✻	✻	✻	✻	✻	O †
N.I.	Inner Control Sleeve	1 7	K1153	H1110-4	G439-13	F562	✻	✻	✻	✻	✻	✻	✻	✻	✻	✻	✻	O †
318	Outer Control Sleeve	1 5	K1154	H1110-5	G439-14	F563	✻	✻	✻	✻	✻	✻	✻	✻	✻	✻	✻	O †
319	Loose Collar	2 3	K1155	H1110-6	G439-15	F564	✻	✻	✻	✻	✻	✻	✻	✻	✻	✻	✻	O †
N.I.	Flat Friction Spring	2	K1156	H1110-7	G439-16	F565	✻	✻	✻	✻	✻	✻	✻	✻	✻	✻	✻	O †
N.I.	Slider	6	K1157	H1110-8	G439-17	F566	✻	✻	✻	✻	✻	✻	✻	✻	✻	✻	✻	O †
320	End Clips Inner	1 6	K1158	H1110-9	G439-18	F567	✻	✻	✻	✻	✻	✻	✻	✻	✻	✻	✻	O †
321	End Clips Outer	1 6	TA1800	TA1800	TA1800	TA1800	✻	✻	✻	✻	✻	✻	✻	✻	✻	✻	✻	O †
322	Pins for End Clips	4	K1159	H1110-10	G439-19	F568	✻	✻	✻	✻	✻	✻	✻	✻	✻	✻	✻	O †
N.I.	Spring Steel Collar	1 0	K1160	H1110-11	G439-20	F569	✻	✻	✻	✻	✻	✻	✻	✻	✻	✻	✻	O †
	Control Levers and Parts																	
323	Clutch Control Lever complete	7 0	K1071	..	..	..	✻	✻	..	..	..	..	..	..	..		..	O †
	Clutch Control Lever complete	7 0	..	H1034	G394-1	F515	..	..	✻	✻	✻	✻	✻	✻	✻	✻	✻	O †
324	Clutch Control Lever only	3 6	K1072	..	..	..	✻	✻	..	..	..	..	..	..	..	..	..	O †
	Clutch Control Lever only	3 6	..	H1035	G395	F516	..	..	✻	✻	✻	✻	✻	✻	✻	✻	✻	O †
325	Base and Clip complete for Clutch Control Lever ..	3 6	K1073	H1036	G396	F517	✻	✻	✻	✻	✻	✻	✻	✻	✻	✻	✻	O †
326	Half Clip only for Clutch Control Lever ..	6	K1074	H1037	G396-1	F518	✻	✻	✻	✻	✻	✻	✻	✻	✻	✻	✻	O †
327	Pin only for Half Clip (Plated)	4	K1075	H1038	G396-2	F519	✻	✻	✻	✻	✻	✻	✻	✻	✻	✻	✻	O †
N.I.	Large Headed Pin for Clutch Control Lever..	4	K1076	H1039	G395-1	F520	✻	✻	✻	✻	✻	✻	✻	✻	✻	✻	✻	O †
	Washer for Clutch Control Lever (Plated) "D" Plain ..	4	K1077	H1040	G395-2	F521	✻	✻	✻	✻	✻	✻	✻	✻	✻	✻	✻	O †
323	Exhaust Lifter Lever complete	7 0	K1078	..	..	..	✻	✻	..	..	..	..	..	..	..	..	..	O †
324	Exhaust Lifter Lever only	3 6	K1079	..	..	..	✻	✻	..	..	..	..	..	..	..	..	..	O †
325	Base and Clip for Exhaust Lifter Lever ..	3 6	K1080	..	..	..	✻	✻	..	..	..	..	..	..	..	..	..	O †

This scan is explicit for non-commercial use and is not intended for financial or material gain by anyone

Wh)rdering Quote Description and Part Number from Correct Column for your Horse Power and Model.

NOTE When * Indicates models for which Part is suitable occurs in more than one column in same line Part is interchangeable

Illustration No.	DESCRIPTION OF PART.	Price. £ s. d.	PART NUMBER 9.96 h.p.	3.49 h.p.	4.98 h.p.	2.48 h.p.	M1 Twin	M2 Twin	M3 s.v.	M4 s.v.	M5 s.v.	M6 o.h.v.	M7 o.h.c.	M8 o.h.v.	M9 s.v.	M10 o.h.c.	M12 s.v.	For Dealer's Use.
	Control Levers & Parts (Continued.)																	
326	Half Clip only for Exhaust Lifter Lever ..	6	K1074	..	..	..	*	*	..	..	..	..	..	..	..	..	..	O †
327	Pin only for Half Clip (Plated)	4	K1075	..	..	..	*	*	..	..	..	..	..	..	..	..	..	O †
N.I.	Large Headed Pin for Exhaust Lifter Lever ..	4	K1076	..	..	..	*	*	..	..	..	..	..	..	..	..	..	O †
N.I.	Washer for Exhaust Lifter Lever (Plated) .. "D" Plain	1	K1077	..	..	..	*	*	..	..	..	..	..	..	..	..	..	O †
	NOTE—Front Brake and Exhaust Lifter Control Levers and Parts are Interchangeable, and are similar to those fitted to 1928 Models.																	
328	Inverted Lever complete less Cables ..	4 6	..	H1028-1	G339A	F510	..	..	*	*	*	*	*	*	*	*	*	O †
329	Inverted Lever only	3 1	..	H1029-1	G399.1A	F511	..	..	*	*	*	*	*	*	*	*	*	O †
330	Pin for Inverted Lever, 3/16 x 11/16 x 26 ..	2	..	H1030	G399-2	F512	..	..	*	*	*	*	*	*	*	*	*	O †
N.I.	Nut for Inverted Lever, 3/16 x 26 x ½ x 5/16 ..	1	..	H1030-1	G399-3	TA2000	..	..	*	*	*	*	*	*	*	*	*	O †
331	Control Body only in Handlebar	2 6	..	H1031	G399-3A	F513	..	..	*	*	*	*	*	*	*	*	*	O †
N.I.	Pin for fixing Control Body in Handlebar .. 3/16 x ½ x 24	1	..	H413	G121-1	F126	..	..	*	*	*	*	*	*	*	*	*	O †
332	Magneto Control Lever complete	4 3	K1082	H1041	G402	F522	*	*	*	*	*	*	*	*	*	*	*	O †
333	Base Clip for Magneto Control Lever ..	1 6	K1083	H1042	G402-1	F523	*	*	*	*	*	*	*	*	*	*	*	O †
334	Clip Pin for Magneto Control Lever (Plated)	4	K1084	H1043	G402-2	F524	*	*	*	*	*	*	*	*	*	*	*	O †
335	Centre Pin for Magneto Control Lever ..	3	K1085	H1044	G402-3	F525	*	*	*	*	*	*	*	*	*	*	*	O †
336	Top Plate for Magneto Control Lever ..	6	K1086	H1045	G402-4	F526	*	*	*	*	*	*	*	*	*	*	*	O †
337	Lever only	2 3	K1089	H1049	G402-5	F527	*	*	*	*	*	*	*	*	*	*	*	O †
N.I.	Flat Spring Washer	3	K1091	H1050	G402-6	F528	*	*	*	*	*	*	*	*	*	*	*	O †
N.I.	Fibre Friction Washer	3	K1092	H1051	G402-7	F529	*	*	*	*	*	*	*	*	*	*	*	O †

This scan is explicit for non-commercial use and is not intended for financial or material gain by anyone

When Ordering Quote Description and Part Numbers from Correct Column for your Horse Power and Model.

N ✲ Indicates models for which Part is suitable.
W ✲ occurs in more than one column in same line Part is interchangeal

Illustration No.	DESCRIPTION OF PART.	Price. £ s. d.	PART NUMBER 9.95 h.p.	3.49 h.p.	4.98 h.p.	2.49 h.p.	MODELS M1 Twin	M2 Twin	M3 s.v.	M4 s.v.	M5 s.v.	M6 o.h.v.	M7 o.h.c.	M8 o.h.v.	M9 s.v.	M10 o.h.c.	M12 s.v.	For Dealer's Use.
	Control Cables.																	
	(These lengths are correct for soldering)																	
338	Valve Lifter Control Cable complete ..	4 3	K1167	..	..	..	✲	✲	..	..	..	..	..	..	..	..	..	O †
	Valve Lifter Control Cable complete ..	4 3	..	H1112	G406	F580	..	..	✲	✲	✲	✲	✲	✲	✲	✲	✲	O †
339	Valve Lifter Control Inner Wire 3ft. 11¼in.	9	K1169	..	..	..	✲	✲	..	..	..	..	..	..	..	..	..	O †
	Valve Lifter Control Inner Wire 4ft. 4¾in. ..	10	..	H1114	G406-2	F581	..	..	✲	✲	✲	✲	✲	✲	✲	✲	✲	O †
340	Valve Lifter Control Outer Casing 3ft 8in. ..	2 6	K1171	..	..	..	✲	✲	..	..	..	..	..	..	..	..	..	O †
	Valve Lifter Control Outer Casing 4ft. 0in. ..	2 9	..	H1116	G406-1	F582	..	..	✲	✲	✲	✲	✲	✲	✲	✲	✲	O †
N.I.	Nipple only for Inner Wire	2	K1174	..	..	..	✲	✲	..	..	..	..	..	..	..	..	..	O †
	Nipple only for Inner Wire	2	..	H1117	G406-3	F583	..	..	✲	✲	✲	✲	✲	✲	✲	✲	✲	O †
	Shackle for Valve Lifter Control	4	K1172	..	..	..	✲	✲	..	..	..	..	..	..	..	..	..	O †
	Plain Pin for Shackle for Valve Lifter Control 3 16 x 9 16 x 5 16 Head diameter	1	K1173	..	..	..	✲	✲	..	..	..	..	..	..	..	..	..	O †
	Cotter for Shackle for Valve Lifter Control ..	1	TA2500	..	..	..	✲	✲	..	..	..	..	..	..	..	..	..	.. †
341	Front Brake Control Cable complete ..	3 6	TA2520	..	..	..	✲	✲	..	..	..	..	..	..	..	..	..	.. †
	Front Brake Control Cable complete ..	3 0	..	TA2540	..	..	..	..	✲	✲	✲	✲	✲	..	..	..	..	.. †
	Front Brake Control Cable complete ..	3 0	..	..	TA2560	..	..	..	..	..	..	..	..	✲	✲	✲	..	.. †
	Front Brake Control Cable complete ..	2 9	..	..	..	TA2580	..	..	..	..	..	..	..	..	..	..	✲	.. †
N.I.	Front Brake Control Cable Inner Wire 3ft. 2¾in. ..	8	TA2600	..	..	..	✲	✲	..	..	..	..	..	..	..	..	..	.. †
	Front Brake Control Cable Inner Wire 3ft. 1¾in. ..	8	..	TA2620	..	..	..	..	✲	✲	✲	✲	✲	..	..	..	..	.. †
	Front Brake Control Cable Inner Wire 3ft. 2¾in. ..	8	..	..	TA2640	..	..	..	..	..	..	..	..	✲	✲	✲	..	.. †
	Front Brake Control Cable Inner Wire 2ft. 10¼in. ..	7	..	..	..	TA2660	..	..	..	..	..	..	..	..	..	..	✲	.. †
342	Front Brake Control Outer Casing 2ft 8in. ..	1 9	TA2680	..	..	..	✲	✲	..	..	..	..	..	..	..	..	..	.. †
	Front Brake Control Outer Casing 2ft. 9¼in ..	1 9	..	TA2700	..	..	..	..	✲	✲	✲	✲	✲	..	..	..	..	.. †
	Front Brake Control Outer Casing 2ft 10¼in.	1 9	..	..	TA2720	..	..	..	..	..	..	..	..	✲	✲	✲	..	.. †
	Front Brake Control Outer Casing 2ft. 6in. ..	1 7	..	..	..	TA2740	..	..	..	..	..	..	..	..	..	..	✲	.. †
N.I.	Plain Stop for Front Brake Control Outer Casing	6	K1179	..	..	..	✲	✲	..	..	..	..	..	..	..	..	..	O
	Shackles for Front Brake Control	5	K1180	..	..	..	✲	✲	..	..	..	..	..	..	..	..	..	

This scan is explicit for non-commercial use and is not intended for financial or material gain by anyone

W. Ordering Quote Description and Part Number from Correct Column for your Horse Power and Model.

Control Cables
(Continued).

Illustration No.	DESCRIPTION OF PART.	Price. £ s. d.	PART NUMBER 9.96 h.p.	3.49 h.p.	4.98 h.p.	2.48 h.p.
	Plain Pin for Shackle for Front Brake Control ¼ x ⅝ x ⅜ head diameter	1	K1181	..	..	..
	Cotter for Shackle for Front Brake Control ..	1	TA2500	..	..	..
N.I.	Shackle for Front Brake Control	5	..	TA2840	TA2840	TA2840
	Plain Pin for Shackle for Front Brake Control 3/16 x 9/16 x 5/16 head diameter	1	..	TA2860	TA2860	TA2850
	Cotter for Shackle for Front Brake Control ..	1	TA2880	TA2880	TA2880	TA2880
	Clutch Control Cable complete	5 0	TA2900	..	..	..
	Clutch Control Cable complete	4 3	..	TA2920	..	..
350	Clutch Control Cable complete	4 6	..	..	G397	..
	Clutch Control Cable complete	4 0	..	..	..	TA2960
	Clutch Control Cable Inner Wire 4ft. 9¼in. ..	1 3	TA2980	..	..	..
	Clutch Control Cable Inner Wire 4ft. 3⅝in. ..	1 0	..	TA3000	..	..
N.I.	Clutch Control Cable Inner Wire 4ft. 7½in. ..	1 0	..	..	G397-2	..
	Clutch Control Cable Inner Wire 4ft. 0⅝in. ..	1 0	..	..	..	TA3040
	Clutch Control Cable Outer Casing 4ft. 5¼in...	3 6	TA3060	..	..	..
	Clutch Control Cable Outer Casing 4ft. ..	3 0	..	TA3080	..	..
351	Clutch Control Cable Outer Casing 4ft 3⅜in. ..	3 3	..	..	G397-1	..
	Clutch Control Cable Outer Casing 3ft. 9in. ..	2 9	..	..	..	TA3120
352	Nipples only for Inner Wire	2	K1174	H1130	G397-4	F590
	Magneto Control Cable complete ..	2 9	K1197	..	..	..
353	Magneto Control Cable complete ..	2 9	..	TA3180	TA3180	..
	Magneto Control Cable complete ..	2 6	..	..	..	TA3200
	Magneto Control Cable Inner Wire 3ft. 1⅝in.	8	K1199	..	..	..
354	Magneto Control Cable Inner Wire 3ft. 2⅝in.	8	..	TA3240	TA3240	..
	Magneto Control Cable Inner Wire 2ft. 11⅝in.	7	..	..	..	TA3260
	Magneto Control Cable Outer Casing 2ft. 10in.	1 10	K1201	..	..	..
355	Magneto Control Cable Outer Casing 2ft. 11in.	1 10	..	TA3300	TA3300	..
	Magneto Control Cable Outer Casing 2ft. 7½in.	1 9	..	..	..	TA3320

NOT ✻ Indicates models for which Part is suitable.
Wh ✻ occurs in more than one column in same line Part is interchangeal

MODELS M1 Twin	M2 Twin	M3 s.v.	M4 s.v.	M5 s.v.	M6 o.h.v.	M7 o.h.c.	M8 o.h.v.	M9 s.v.	M10 o.h.c.	M12 s.v.	For Dealer's Use.
✻	✻	..	..	..	..	..	..	..	..	..	O †
✻	✻	..	..	..	..	..	..	..	..	..	.. †
..	..	✻	✻	✻	✻	✻	✻	✻	✻	✻	.. †
..	..	✻	✻	✻	✻	✻	✻	✻	✻	✻	.. †
✻	✻	✻	✻	✻	✻	✻	✻	✻	✻	✻	.. †
✻	✻	..	..	..	..	..	..	..	..	..	.. †
..	..	✻	✻	✻	✻	✻	..	..	..	..	.. †
..	..	..	..	..	..	..	✻	✻	✻	..	O †
..	..	..	..	..	..	..	..	..	..	✻	.. †
✻	✻	..	..	..	..	..	..	..	..	..	.. †
..	..	✻	✻	✻	✻	✻	..	..	..	..	.. †
..	..	..	..	..	..	..	✻	✻	✻	..	O †
..	..	..	..	..	..	..	..	..	..	✻	.. †
✻	✻	..	..	..	..	..	..	..	..	..	.. †
..	..	✻	✻	✻	✻	✻	..	..	..	..	.. †
..	..	..	..	..	..	..	✻	✻	✻	..	O †
..	..	..	..	..	..	..	..	..	..	✻	.. †
✻	✻	✻	✻	✻	✻	✻	✻	✻	✻	✻	O †
✻	✻	..	..	..	..	..	..	..	..	..	O †
..	..	✻	✻	✻	✻	✻	✻	✻	✻	..	.. †
..	..	..	..	..	..	..	..	..	..	✻	.. †
✻	✻	..	..	..	..	..	..	..	..	..	O †
..	..	✻	✻	✻	✻	✻	✻	✻	✻	..	.. †
..	..	..	..	..	..	..	..	..	..	✻	.. †
✻	✻	..	..	..	..	..	..	..	..	..	O †
..	..	✻	✻	✻	✻	✻	✻	✻	✻	..	.. †
..	..	..	..	..	..	..	..	..	..	✻	.. †

This scan is explicit for non-commercial use and is not intended for financial or material gain by anyone

Wh rdering Quote Description and Part Number from

Correct Column for your Horse Power and Model.

Illustration No.	DESCRIPTION OF PART.	Price. £ s. d.	PART NUMBER 9.96 h.p.	3.49 h.p.	4.98 h.p.	2.48 h.p.
	Control Cables (Continued.)					
356	Nipples only for Inner Wire	2	K1174	..	..	..
	Nipples only for Inner Wire	2	..	H1117	G403-3	F583
	Magydno Control Cable complete ..	2 7	TA3380	..	..	..
353	Magdyno Control Cable Complete ..	2 9	..	TA3400	TA3400	..
	Magdyno Control Cable complete ..	2 4	..	..	..	TA3420
	Magdyno Control Cable Inner Wire, 3ft 4½ in.	9	TA3440	..	..	..
354	Magdyno Control Cable Inner Wire, 3ft. 6¾ in.	9	..	TA3460	TA3460	..
	Magdyno Control Cable Inner Wire, 3ft. 1½ in.	7	..	..	..	TA3480
	Magdyno Control Cable Outer Casing, 3ft.0½in.	1 10	TA3500	..	..	..
355	Magdyno Control Cable Outer Casing, 3ft. 3in.	2 0	..	TA3520	TA3520	..
	Magdyno Control Cable Outer Casing, 2ft.10 in.	1 9	..	..	..	TA3540
	Carburetter Control Cable complete for Bowden Twist Grip ..	5 0	TA3560	..	..	..
	Carburetter Control Cable complete for Bowden Twist Grip ..	5 0	..	TA3580	..	..
	Carburetter Control Cable complete for Bowden Twist Grip ..	5 0	..	..	TA3600	..
	Carburetter Control Cable complete for Bowden Twist Grip ..	5 0	..	..	..	TA3620
N.I.	Handlebar Carburetter Control Cable complete with Adjusters ..	10 0	TA3640	..	..	..
	Handlebar Carburetter Control Cable complete with Adjusters. ..	10 0	..	TA3660	..	..
	Handlebar Carburetter Control Cable complete with Adjusters :	10 0	..	..	TA3680	..
	Handlebar Carburetter Cable complete with Adjusters ..	10 0	..	..	..	TA3700
348	Bowden Adjuster for Clutch, Valve Lifter and Front Brake Cables (Plated) ¼ x 1¼ x 26 ..	6	K680	H644	G397-3	F596
	Bowden Adjuster for Magneto Control cables (Plated) ¼ x 11/16 x 26	4	TA3740	H644-1	G394-5	TA3740
349	Locknut for Bowden Adjusters (Plated) ¼ x 26 x ⅛ x ⅜	2	K505	H510	G157	F178

NOTE ✻ Indicates models for which Part is suitable.
Whe ✻ occurs in more than one column in same line Part is interchangeab'

MODELS M1 Twin	M2 Twin	M3 s.v.	M4 s.v.	M5 s.v.	M6 o.h.c.	M7 o.h.c.	M8 o.h.v.	M9 s.v.	M10 o.h.c.	M12 s.v.	For Dealer's Use.
✻	✻	..	..	..	..	..	..	..	..	..	O †
..	..	✻	✻	✻	✻	✻	✻	✻	✻	✻	O †
✻	✻	..	..	..	..	..	..	..	..	..	.. †
..	..	✻	✻	✻	✻	✻	✻	✻	✻	..	.. †
..	..	..	..	..	..	..	..	..	..	✻	.. †
✻	✻	..	..	..	..	..	..	..	..	..	.. †
..	..	✻	✻	✻	✻	✻	✻	✻	✻	..	.. †
..	..	..	..	..	..	..	..	..	..	✻	.. †
✻	✻	..	..	..	..	..	..	..	..	..	.. †
..	..	✻	✻	✻	✻	✻	✻	✻	✻	..	.. †
..	..	..	..	..	..	..	..	..	..	✻	.. †
✻	✻	..	..	..	..	..	..	..	..	..	.. †
..	..	✻	✻	✻	✻	✻	..	..	..	..	.. †
..	..	..	..	..	..	..	✻	✻	✻	..	. †
..	..	..	..	..	..	..	..	..	..	✻	.. †
✻	✻	..	..	..	..	..	..	..	..	..	.. †
..	..	✻	✻	✻	✻	✻	..	..	..	..	.. †
..	..	..	..	..	..	..	✻	✻	✻	..	.. †
	..	..	..	..	..	..	..	..	..	✻	.. †
✻	✻	✻	✻	✻	✻	✻	✻	✻	✻	✻	O †
✻	✻	✻	✻	✻	✻	✻	✻	✻	✻	✻	O †
✻	✻	✻	✻	✻	✻	✻	✻	✻	✻	✻	O

This scan is explicit for non-commercial use and is not intended for financial or material gain by anyone

Whe ‚dering Quote Description and Part Number from Correct Column for your Horse Power and Model.

NOT ✲ Indicates models for which Part is suitable.
Whe ✲ occurs in more than one column in same line Part is interchangeabl

Illustration No.	DESCRIPTION OF PART.	Price. £ s. d.	PART NUMBER 9.96 h.p.	3.49 h.p.	4.98 h.p.	2.48 h.p.	MODELS M1 Twin	M2 Twin	M3 s.v.	M4 s.v.	M5 s.v.	M6 o.h.v.	M7 o.h.c.	M8 o.h.v.	M9 s.v.	M10 o.h.c.	M12 s.v.	For Dealer's Use.
	Chaincases & Chainguards																	
	NOTE--When ordering Parts state whether for Welded or Soldered type of Chaincase																	
350	Chaincase complete with fittings	6 6 6	XA20	..	..	..	✲	..	..	..	..	..	..	..	..	..	..	..
	Chaincase complete with fittings	2 15 0	XA40	..	..	..		✲	..	..	..	..	..	..	..	..	..	..
	Chaincase complete with fittings	1 7 6	..	XA60	..	..	..	..	✲	✲	✲	✲	..	..	..	..	..	..
	Chaincase complete with fittings	1 7 6	..	XA80	..	..	..	..	..	..	..	..	✲	..	..	..	..	..
	Chaincase complete with fittings	2 15 0	..	..	XA100	..	..	..	..	..	..	..	..	✲	✲	..	..	..
	Chaincase complete with fittings	2 15 0	..	..	XA120	..	..	..	..	..	..	..	..	..	..	✲	..	..
	Chainguard complete with fittings (Stripped Type)	15 6	..	..	..	F450	..	..	..	..	..	..	..	..	..	..	✲	O
	Chaincase complete with fittings .. .. (Semi-enclosed Type)	1 2 6	..	..	..	XA160	..	..	..	..	..	..	..	..	..	..	✲	..
351	Front Portion of Chaincase less fittings ..	4 3 6	XA180	..	..	..	✲	..	..	..	..	..	..	..	..	..	..	..
	Front Portion of Chaincase less fittings ..	1 18 9	XA200	..	..	..	..	✲	..	..	..	..	..	..	..	..	..	..
	Front Portion of Chaincase less fittings ..	17 0	..	XA220	..	..	..	..	✲	✲	✲	✲	..	..	..	..	..	..
	Front Portion of Chaincase less fittings ..	17 0	..	XA240	..	..	..	..	..	..	..	..	✲	..	..	..	..	..
	Front Portion of Chaincase less fittings ..	1 18 9	..	..	XA260	..	..	..	..	..	..	..	..	✲	✲	..	..	..
	Front Portion of Chaincase less fittings ..	1 18 9	..	..	XA280	..	..	..	..	..	..	..	..	..	..	✲	..	..
	Front Portion of Chainguard less fittings .. (Stripped Type)	9 6	..	..	..	XA300	..	..	..	..	..	..	..	..	..	..	✲	..
	Front Portion of Chaincase less fittings .. (Semi-enclosed Type)	14 6	..	..	..	XA320	..	..	..	..	..	..	..	..	..	..	✲	..
352	Clutch Inspection Cover	5 6	XA340	..	XA340	..	✲	✲	..	..	..	..	..	✲	✲	✲	..	..
	Clutch Inspection Cover	3 0	..	XA360	..	..	..	..	✲	✲	✲	✲	✲	..	..	..	..	..
	Clutch Inspection Cover (Semi-enclosed Type)	2 0	..	..	..	XA380	..	..	..	..	..	..	..	..	..	..	✲	..
353	Screw for Inspection Cover (Welded Type) .. "O" B.A. x 5/16 Cheese Head	1	XA400	XA400	XA400	XA400	..	✲	✲	✲	✲	✲	✲	✲	✲	✲	✲	..
	Screw for Clutch Inspection Cover .. (Soldered Type) ¼ x 5/16 x 20 Round Head Plated	1	K969	XA420	G288-1	XA420	✲	✲	✲	✲	✲	✲	✲	✲	✲	✲	✲	O
N.I.	Top Half of Front portion of Chaincase ..	2 6 0	XA440	..	..	..	..	✲	..	..	..	..	..	..	..	..	..	..
	Top Half of Front portion of Chaincase ..	1 5 0	..	..	XA460	..	..	..	..	..	..	..	..	✲	✲	..	..	..
	Bottom Half of Front portion of Chaincase ..	1 17 6	XA480	..	..	..	..	✲	..	..	..	..	..	..	..	..	..	..
N.I.	Bottom Half of Front Portion of Chaincase ..	13 9	..	..	XA500	..	..	..	..	..	..	..	..	✲	✲	..	..	..
	Pin for securing halves of Chaincase .. ¼ x ¼ x 20 Round Head (Plated)	1	XA520	..	XA520	..	✲	✲	..	..	..	..	..	✲	✲	✲	..	..

This scan is explicit for non-commercial use and is not intended for financial or material gain by anyone

Whe. rdering Quote Description and Part Number from Correct Column for your Horse Power and Model.

NOT Indicates models for which Part is suitable.
Whe occurs in more than one column in same line Part is interchangeabl

Illustration No.	DESCRIPTION OF PART.	Price. £ s. d.	PART NUMBER 9.96 h.p.	3.49 h.p.	4.98 h.p.	2.48 h.p.	MODELS M1 Twin	M2 Twin	M3 s.v.	M4 s.v.	M5 s.v.	M6 o.h.v.	M7 o.h.c.	M8 o.h.v.	M9 s.v.	M10 o.h.c.	M12 s.v.	For Dealer's Use.
	Chaincases & Chainguards (Continued).																	
354	Rear Portion of Chaincase complete (Halves not supplied separately)	1 14 6	XA540	..	.	..	*	..	..	..	..	..	..	..	..	..	..	..
	Rear Portion of Chainguard	10 9	XA560	..	..	..	..	*	..	..	..	..	..	..	..	..	..	..
	Rear Portion of Chainguard	7 6	..	XA580	..	..	..	..	*	*	*	*	*	..	..	..	..	..
	Rear Portion of Chainguard	10 9	..	..	XA600	..	..	..	..	..	..	..	..	*	*	..	..	..
	Rear Portion of Chainguard	10 9	..	..	XA620	..	..	..	..	..	..	..	..	..	..	*	..	..
	Rear Portion of Chainguard	6 0	..	..	..	XA640	..	..	..	..	..	..	..	..	..	..	*	..
355	Distance Bolt in Crankcase for Chaincase 3½ x ⅜ x 26	6	XA660	..	..	..	*	*	..	..	..	..	..	..	..	..	..	..
	Distance Bolt in Crankcase for Chaincase 2½ x ⅜ x 26	4	..	H950	..	..	..	..	*	*	*	*	*	..	..	..	..	O
	Distance Bolt in Crankcase for Chaincase 3¾ x ⅜ x 26	6	..	..	XA700	..	..	..	..	..	..	..	..	*	*	*	..	..
	Distance Bolt in Crankcase for Chaincase 5/16 x 2½ x 20	4	..	..	..	F452	..	..	..	..	..	..	..	..	..	..	*	O
N.I.	Distance Spool for Chaincase	10	K980	..	..	..	*	*	..	..	..	..	..	..	..	..	..	O
	Distance Spool for Chaincase	4	..	H956	..	..	..	..	*	*	*	*	*	..	..	..	..	O
N.I.	Distance Spool for Chaincase	4	..	..	G285	..	..	..	..	..	..	..	..	*	*	*	..	O
	Distance Spool for Chaincase	4	..	..	..	F453	..	..	..	..	..	..	..	..	..	..	*	O
	Nut for Distance Bolt for Chaincase (Back) ⅜ x 26 x ⅝ x 9/16	2	K32	..	G2-7	..	*	*	..	..	..	..	..	*	*	*	..	O
	Nut for Distance Bolt for Chaincase (Back) ⅜ x 26 x ½ x ⅝	2	..	ZA7150	..	..	..	..	*	*	*	*	*	..	..	..	..	O
	Nut for Distance Bolt for Chaincase (Front) ⅜ x 26 x ½ x ⅝	2	ZA7150	ZA7150	ZA7150	..	*	*	*	*	*	*	*	*	*	*	..	O
	Washer for Nut in Crankcase ⅜ Plain	1	WA3200	WA3200	..	..	*	*	*	*	*	*	*	..	..	..	..	O
	Washer for Nut in Crankcase ⅜ Double Spring	2	..	..	RA740	..	..	..	..	..	..	..	..	*	*	*	..	O
	Washer for Nut in Crankcase 5/16 Plain	1	..	..	..	ZA6830	..	..	..	..	..	..	.	..	..	..	*	O
	Clip on Chainstay for Chaincase	3	ZA7080	..	G354	..	..	*	..	..	..	..	..	*	*	..	..	O
	Clip on Chainstay for Chaincase	3	..	H1244	..	..	..	*	*	*	*	*	*	..	..	..	..	O
356	Pin for Clip on Chainstay for Chaincase 5/16 x ¾ x 20	2	ZA8840	ZA8840	ZA8840	..	..	*	*	*	*	*	*	*	*	..	..	..
N.I.	Nut for Clip on Chainstay for Chaincase 5/16 x 20 x ½ x 19/32	1	K707	H320	G212	..	..	*	*	*	*	*	*	*	*	..	..	O
N.I.	Washer for Clip on Chainstay for Chaincase 5/16 Single Spring	1	K299	H163	ZA6040	..	..	*	*	*	*	*	*	*	*	..	..	O
	Pin for fixing Rear Portion of Chaincase to Anchor Plate 5/16 x ⅝ x 20 x ⅜ Shouldered	2	K982	..	..	..	*	..	..	..	..	..	..	..	..	..	..	O

This scan is explicit for non-commercial use and is not intended for financial or material gain by anyone

When Ordering Quote Description and Part Number from Correct Column for your Horse Power and Model.

Illustration No.	DESCRIPTION OF PART.	Price. £ s. d.	PART NUMBER 9.96 h.p.	3.49 h.p.	3.49 h.p.	4.98 h.p.
	Chaincases & Chainguards (Continued.)					
N.I.	Pin for fixing Rear Portion of Chaincase to Anchor Plate 5/16 x ½ x 20	1	ZA7870	..	ZA7870	..
N.I.	Washer for Pin for fixing Rear Portion of Chaincase to Anchor Plate 5/16 Plain	1	ZA6830	..	ZA6830	..
357	Pin for fixing Rear Portion of Chaincase to Carrier 5/16 x ½ x 20	2	..	ZA7870	..	ZA7870
N.I.	Washer for Pin for fixing Rear Portion of Chaincase to Carrier 5/16 Single Spring	1	..	H163	..	F77
N.I.	Chaincase Disc	6	XA1120	..	..	..
358	Oil Filler Cap for Chaincase	4	K975	..	G289	..
N.I.	Rubber Packing for Chaincase	6	XA1160	..	..	..
	Legshields and Fittings NOTE—When ordering state whether for Footboards or Footrests.					
	Legshields complete for Footboards ..	1 2 6	XA1500	XA1500	..	..
	Legshields complete for Footrests	1 4 0	XA1540	XA1540	XA1540	..
	Legshield only R.H. for Footboard ..	8 3	XA1600	XA1600	..	..
	Legshield only L.H. for Footboard ..	8 3	XA1620	XA1620	..	..
	Legshield only R.H. for Footrest ..	7 9	XA1640	XA1640	XA1640	..
	Legshield only L.H. for Footrest ..	7 9	XA1660	XA1660	XA1660	..
	Rod for Down Tube. (Either type) .. 22 in. long	7	XA1680	XA1680	XA1680	..
	Nut for Rod. (Either type). ⅜ x 26 x ⅜ x 9/16	2	K32	H27-4	G2-7	..
	Washer for Nut. (Either type) .. .. ⅜ Single Spring	1	K300	H160	G79-1	..
N.I.	Large Clip for Down Tube. (Either type) .. 1⅜ inside diameter	1 0	XA1700	..	XA1700	..
	Large Clip for Down Tube. (Either type) . 1⅛ inside diameter	1 0	..	XA1710	..	..
	Pin for Large Clip. (Either type) .. 5/16 x 1¼ x 20	3	K476	H478	G111	..
	Nut for Large Clip. (Either type) .. 5/16 x 20 x ¼ x 19/32	1	K707	H320	G212	..
	Washer for Nut. (Either type) .. 5/16 Single Spring	1	K299	H163	XA6040	..
	Distance Tube for Long Rod. (Top). .. (Either type). 10 in. long	1 3	XA1750	XA1750	XA1750	..
	Bottom Rod for Footrest Type, R.H. or L.H. 10 in. long	4	XA1760	XA1760	XA1760	..
	Nut for Bottom Rod for Footrest Type .. ⅜ x 26 x ⅜ x 9/16	2	K32	H27-4	G2-7	..
	Washer for Nut for Footrest Type .. ⅜ Single Spring	1	K300	H160	G79-1	..

NC) ✱ Indicates models for which Part is suitable
Whe.. ✱ occurs in more than one column in same line Part is interchangeab...

MODELS M1 Twin	M2 Twin	M3 s.v.	M4 s.v.	M5 s.v.	M6 o.h.v.	M7 o.h.c.	M8 o.h.v.	M9 s.v.	M10 o.h.c.	M12 s.v.	For Dealer's Use.
..	✱	..	..	..	..	..	✱	✱	✱	..	..
..	✱	..	..	..	..	..	✱	✱	✱	..	O
..	..	✱	✱	✱	✱	✱	..	..	..	✱	..
..	..	✱	✱	✱	✱	✱	..	..	..	✱	O
..	✱	..	..	..	..	..	..	..	..	..	..
✱	✱	..	..	..	..	..	✱	✱	..	..	O
✱	..	..	..	..	..	..	..	..	..	..	..
✱	✱	✱	..	..	..	..	..	..	..	..	..
✱	✱	✱	..	✱	✱	✱	..	✱	✱	..	..
✱	✱	✱	..	..	..	..	..	..	..	..	..
✱	✱	✱	..	..	..	..	..	..	..	..	..
✱	✱	..	✱	✱	✱	..	✱	✱	..	..	..
✱	✱	..	✱	✱	✱	..	✱	✱	..	..	..
✱	✱	✱	✱	✱	✱	..	✱	✱	..	..	..
✱	✱	✱	✱	✱	✱	..	✱	✱	..	..	O
✱	✱	✱	✱	✱	✱	..	✱	✱	..	..	O
✱	✱	✱	✱	✱	✱	..	✱	✱	..	..	..
..	..	✱	✱	✱	✱	..	..	..	..	..	..
✱	✱	✱	✱	✱	✱	..	✱	✱	..	..	O
✱	✱	✱	✱	✱	✱	..	✱	✱	..	..	O
✱	✱	✱	✱	✱	✱	..	✱	✱	..	..	O
✱	✱	✱	✱	✱	✱	..	✱	✱	..	..	..
✱	✱	..	✱	✱	✱	..	✱	✱	..	..	..
✱	✱	..	✱	✱	✱	..	✱	✱	..	..	O
✱	✱	..	✱	✱	✱	..	✱	✱	..	..	O
✱	✱	..	✱	✱	✱	..	✱	✱	..	..	..

This scan is explicit for non-commercial use and is not intended for financial or material gain by anyone

Wh Ordering Quote Description and Part Number from Correct Column for your Horse Power and Model.

NOTE When Indicates models for which Part is suitable occurs in more than one column in same line Part is interchangeable.

Illustration No.	DESCRIPTION OF PART.	Price. £ s. d.	PART NUMBER 9.96 h.p.	3.49 h.p.	4.98 h.p.	2.48 h.p.	M1 Twin	M2 Twin	M3 s.v.	M4 s.v.	M5 s.v.	M6 o.h.v.	M7 o.h.c.	M8 o.h.v.	M9 s.v.	M10 o.h.c.	M12 s.v.	For Dealer's Use.
	Legshields and Fittings (Continued).																	
	Special Nut for Engine Bolt, Footrest Type .. 3/8 x 26 x 3/4 x 9/16	3	XA1810	XA1810	XA1810	..	*	*	..	*	*	*	..	*	*	..	..	..
	Pin for securing Shield for Distance Tube. .. (Either type). 1/4 x 1/8 x 20	1	RA2380	RA2380	RA2380	..	*	*	*	*	*	*	..	*	*	..	..	O
	Nut for Pin. (Either Type). .. .. 1/4 x 20 x 3/16 x 7/16	1	K110	H133	G27-1	..	*	*	*	*	*	*	..	*	*	..	..	O
N I.	Washer for Nut. (Either Type). 1/4 Plain ..	1	K111	H134	G27-2	..	*	*	*	*	*	*	..	*	*	..	..	O
	Washer for Nut. (Either Type) .. .. 1/4 Single Spring	1	MA500	MA500	MA500	..	*	*	*	*	*	*	..	*	*	..	..	O
	Plate under Footboards	4	K1573	H1546	..	..	*	*	*	..	..	..	..	..	..	..	..	O
	Hinge Pin for Plate	3	K1574	H1547	..	..	*	*	*	..	..	..	..	..	..	..	..	O
	Driving Chains & Parts.																	
	Driving Chain, Engine to Gearbox .. 5/8 x 3/8 x 59	10 6	XA2000	..	..	..	*	*	..	..	..	..	..	..	..	..	..	.. +
	Driving Chain, Engine to Gearbox .. 1/2 x .305 x 62	7 6	..	XA2020	..	..	..	.	*	*	*	*	*	..	..	..	..	.. +
	Driving Chain, Engine to Gearbox .. 3/8 x 3/8 x 56	9 10	..	..	XA2040	..	..	..	..	..	..	..	..	*	*	*	..	.. +
	Driving Chain, Engine to Gearbox .. 1/2 x .205 x 60	7 6	..	..	..	F645	..	..	..	..	..	..	..	..	..	..	*	O +
	Driving Chain, Gearbox to Rear Wheel .. 5/8 x 3/8 x 96	17 0	XA2080	..	..	..	*	*	..	..	..	..	..	..	..	..	..	.. +
	Driving Chain, Gearbox to Rear Wheel .. 1/2 x .305 x 112	15 0	..	XA2100	..	..	..	..	*	*	*	*	*	..	..	..	..	.. +
	Driving Chain, Gearbox to Rear Wheel .. 5/8 x 3/8 x 97	17 3	..	..	XA2120	..	..	..	..	..	..	..	..	*	*	*	..	.. +
	Driving Chain, Gearbox to Rear Wheel .. 1/2 x .205 x 122	13 6	..	..	..	F646	..	..	..	..	..	..	..	..	..	..	*	O +
	Driving Chain for Camshaft .. .. 3/8 x 7/32 x 76	9 3	..	XA2160	..	..	..	..	..	..	..	..	*	..	..	..	..	.. +
N.I	Driving Chain for Camshaft .. .. 3/8 x 7/32 x 78	9 6	..	..	XA2180	..	..	..	..	..	..	..	..	..	..	*	..	.. +
	Driving Chain for Magneto .. .. 1/2 x 1/8 x 42	1 3	K1244	..	..	..	*	*	..	..	..	..	..	..	..	..	..	O +
	Driving Chain for Magneto .. 1/2 x 1/8 x 36	1 0	..	H1285	G359-3	..	..	..	*	*	*	*	..	*	*	..	..	O +
	Driving Chain for Magneto .. .. 3/8 x 7/32 x 54	6 7	..	H1285-1	G359-2	..	..	..	..	..	..	..	*	..	..	*	..	O +
	Driving Chain for Magneto .. 1/2 x 1/8 x 33	1 0	..	..	..	F647	..	..	..	..	..	..	..	..	..	..	*	O +
	Spring Link .. .. 3/8 x 3/8	6	K1245	..	G361	..	*	*	..	..	..	..	..	*	*	*	..	O +
	Spring Link .. .. .. 1/2 x .305	4	..	XA2300	..	..	..	..	*	*	*	*	*	..	..	..	..	O +
	Spring Link .. .. 1/2 x .205	4	..	..	..	F648	..	..	..	..	..	..	..	..	..	..	*	O +
	Spring Clip for Spring Link	1	K1246	..	G362	..	*	*	..	..	..	..	..	*	*	*	..	O +
	Spring Clip for Spring Link	1	..	H1289	..	..	..	..	*	*	*	*	*	..	..	..	..	O +

This scan is explicit for non-commercial use and is not intended for financial or material gain by anyone

When Ordering Quote Description and Part Number from Correct Column for your Horse Power and Model.

NOTE When * Indicates models for which Part is suitable. occurs in more than one column in same line Part is interchangeable.

Illustration No.	DESCRIPTION OF PART.	Price. £ s. d.	PART NUMBER 9.96 h.p.	3.49 h.p.	4.98 h.p.	2.48 h.p.	MODELS M1 Twin	M2 Twin	M3 s.v.	M4 s.v.	M5 s.v.	M6 o.h.v.	M7 o.h.c.	M8 o.h.v.	M9 s.v.	M10 o.h.c.	M12 s.v.	For Dealer's Use
	Driving Chains & Parts (Continued.)																	
	Spring Clip for Spring Link	1	..	..	..	F649	..	..	..	..	..	..	..	..	..	..	*	O †
	Spring Link for Magneto Chain .. .. ½ x ⅛	2	K1248	H1290	G364	F650	*	*	*	*	*	*	..	*	*	..	*	O †
	Spring Link for Magneto Chain or Camshaft Chain ⅜ x 7/32	3	..	H1290-1	G364-2	..	..	..	..	..	..	..	*	..	..	*	..	O †
	Spring Clip for Magneto Chain	1	K1249	H1291	G364-1	F651	*	*	*	*	*	*	..	*	*	..	*	O †
	Spring Clip for Magneto Chain or Camshaft Chain	1	..	H1291-1	G364-3	..	..	..	..	..	..	..	*	..	..	*	..	O †
N.I.	Two Link Peice for Driving Chains .. ⅜ x ⅛	8	K1250	..	G360	..	*	*	..	..	..	..	..	*	*	*	..	O †
	Two Link Piece for Driving Chains .. ½ x .305	6	..	XA2500	..	..	..	..	*	*	*	*	*	..	..	..	..	O †
	Two Link Piece for Driving Chains .. ½ x .205	6	..	..	..	F652	..	..	..	..	..	..	..	..	..	..	*	O †
	Two Link Piece for Magneto Chains .. ½ x ½	2	K1252	H1294	G363	F653	*	*	*	*	*	*	..	*	*	..	*	O †
	Two Link Piece for Magneto or Camshaft Chains ⅜ x 7/32	4	..	H1294-1	G363-1	..	..	..	..	..	..	..	*	..	..	*	..	O †
	Tools, etc. Only Tools marked "K" are supplied with Tool Roll when ordered as a "Spare Part."																	
359	Tool Roll, complete with Tools	1 13 0	XA2600	..	XA2600	..	*	*	..	..	..	..	..	..	*	..	..	..
	Tool Roll, complete with Tools	1 12 0	..	XA2620	..	..	..	..	*	*	*	..	..	..	..	..	..	..
	Tool Roll, complete with Tools	1 9 0	..	XA2640	..	..	..	..	..	..	..	*	*	..	..	..	..	..
	Tool Roll, complete with Tools	1 9 9	..	..	XA2660	..	..	..	..	..	..	..	..	*	..	..	..	..
	Tool Roll, complete with Tools	1 6 9	..	..	XA2680	..	..	..	..	..	..	..	..	..	..	*	..	..
	Tool Roll, complete with Tools ..	1 10 6	..	..	..	XA2700	..	..	..	..	..	..	..	..	..	..	*	..
360	Tool Roll only, less Tools K	5 6	K1682	H1640	G408	F891	*	*	*	*	*	*	*	*	*	*	*	O
361	Pliers K	2 9	K1684	H1642	G410	F893	*	*	*	*	*	*	*	*	*	*	*	O
362	Small Pliers for Gudgeon Pin Ring K ..	6	K1685	H1643	G411	F94	*	*	*	*	*	*	*	*	*	*	*	O
363	Valve Cap Spanner K	3 6	K1688	H1646	G422-1	..	*	*	*	*	*	..	..	..	*	..	..	O
	Valve Cap Spanner K	3 6	..	..	..	F897	..	..	..	..	..	..	..	..	..	..	*	O
364	Valve Lifter Hook K	10	K1689	H1647	G422-2	F898	*	*	*	*	*	..	..	..	*	..	*	O
N.I.	Magneto Spanner K	6	K1690	H1648	G416	F899	*	*	*	*	*	*	*	*	*	*	*	O
365	Large Open-Ended Spanner K ⅜ x 7/16 ..	1 6	K1692	H1650	G413	F901	*	*	*	*	*	*	*	*	*	*	*	O
366	Medium Open-Ended Spanner K ¼ x 5/16..	1 3	K1693	H1651	G414	F902	*	*	*	*	*	*	*	*	*	*	*	O
367	Small Open-Ended Spanner K ⅛ x 3/16 ..	10	K1694	H1652	G415	F903	*	*	*	*	*	*	*	*	*	*	*	O

This scan is explicit for non-commercial use and is not intended for financial or material gain by anyone

When Ordering Quote Description and Part Number from Correct Column for your Horse Power and Model.

NOTE ✻ Indicates models for which Part is suitable.
When ✻ occurs in more than one column in same line Part is interchangeable.

	DESCRIPTION OF PART.	Price. £ s. d.	PART NUMBER 9.96 h.p.	3.49 h.p.	4.98 h.p.	2.48 h.p.	MODELS M1 Twin	M2 Twin	M3 s.v.	M4 s.v.	M5 s.v.	M6 o.h.v.	M7 o.h.c.	M8 o.h.v.	M9 s.v.	M10 o.h.c.	M12 s.v.	For Dealer's Use
	Tools, etc.—Continued.																	
369	Screwdriver K	1 3	K1698	H1661	G418	F907	✻	✻	✻	✻	✻	✻	✻	✻	✻	✻	✻	O
370	Tyre Levers .. .. .. pair..	1 3	XA2980	XA2980	XA2980	XA2980	✻	✻	✻	✻	✻	✻	✻	✻	✻	✻	✻	O
371	Combined Hub Lock Ring and Exhaust Pipe Nut Spanner K	2 6	XA3000	XA3000	XA3000	XA3000	✻	✻	✻	✻	✻	..	..	..	✻	..	✻	..
	Combined Hub Lock Ring and Exhaust Pipe Nut Spanner K	2 6	..	XA3020	..	..	..	..	..	..	..	✻	✻	..	..	..	..	..
	Combined Hub Lock Ring and Exhaust Pipe Nut Spanner K	2 6	..	..	XA3040	..	..	..	..	..	..	..	..	✻	..	✻	..	..
379	Large Adjustable Spanner K	6 0	K1691	H1649	G412	F900	✻	✻	✻	✻	✻	✻	✻	✻	✻	✻	✻	O
372	Hub Cup Spanner K	1 9	XA3080	XA3080	XA3080	XA3080	✻	✻	✻	✻	✻	✻	✻	✻	✻	✻	✻	..
373	Box Spanner for Hub Sleeve Bolt K ..	2 9	K1702	..	G423	..	✻	✻	..	..	..	..	..	✻	✻	..	..	O
373	Box Spanner for Hub Sleeve Bolt K ..	1 9	..	H1674	..	..	..	..	✻	✻	✻	✻	..	..	..	..	..	O
374	Spanner for Tappet Enclosing Tube Nut K ..	4	..	XA3140	XA3140	..	..	..	..	..	..	✻	..	✻	..	..	..	..
N.I.	Valve Adjusting Gauges .. pair.. 1 Inlet, 1 Exhaust K	3	..	XA3160	XA3160	..	..	..	..	..	..	..	✻	..	..	✻	..	..
375	Tappet Adjusting Spanner K	4	..	XA3180	XA3180	..	..	..	..	..	..	✻	✻	✻	..	✻	..	..
N.I.	Gearbox Adjusting Rod K	3	XA3210	XA3210	XA3210	XA3210	✻	✻	✻	✻	✻	✻	✻	✻	✻	✻	✻	..
376	Gearbox Adjusting Spanner	9	XA3220	XA3220	XA3220	XA3220	✻	✻	✻	✻	✻	✻	✻	✻	✻	✻	✻	..
N.I.	Grease Gun	6 0	K1707	H1668	G426	F911	✻	✻	✻	✻	✻	✻	✻	✻	✻	✻	✻	O †
N.I.	Grease, 1 Tin	6	XA3260	XA3260	XA3260	XA3260	✻	✻	✻	✻	✻	✻	✻	✻	✻	✻	✻	..
N.I.	Duster K	4	XA3280	XA3280	XA3280	XA3280	✻	✻	✻	✻	✻	✻	✻	✻	✻	✻	✻	..
377	Wheel Setting Gauge, 19 x 2½ Rim ..	7	K1713	..	G433	..	✻	✻	..	..	..	..	..	✻	✻	✻	..	O
	Wheel Setting Gauge, 19-20-21 x 2½ Rim ..	7	..	H1672-1	..	F912	..	..	✻	✻	✻	✻	✻	..	..	..	✻	O
N.I.	Valve Extractor	5 9	..	H1653	G422	..	..	..	..	..	..	✻	✻	✻	..	✻	..	O
	Valve Grinding Tool	1 6	..	H1656	G421	..	..	..	..	..	..	✻	✻	✻	..	✻	..	O
	Tappet Tube Extractor	1 0	..	XA3380	XA3380	..	..	..	..	..	..	✻	..	✻	..	..	..	..
	Box Spanners .. .. .. set 3..	1 9	K1686	H1644	G428	F895	✻	✻	✻	✻	✻	✻	✻	✻	✻	✻	✻	O
	Chain Stud Extractor	4 6	K1701	H1667	G435	F910	✻	✻	✻	✻	✻	✻	✻	✻	✻	✻	✻	O †
378	Inflator	4 6	K1705	..	..	..	✻	✻	..	..	..	..	..	..	..	..	..	O †
	Inflator	4 6	..	..	XA3400	..	..	..	..	..	..	..	..	✻	✻	✻	..	O †

This scan is explicit for non-commercial use and is not intended for financial or material gain by anyone

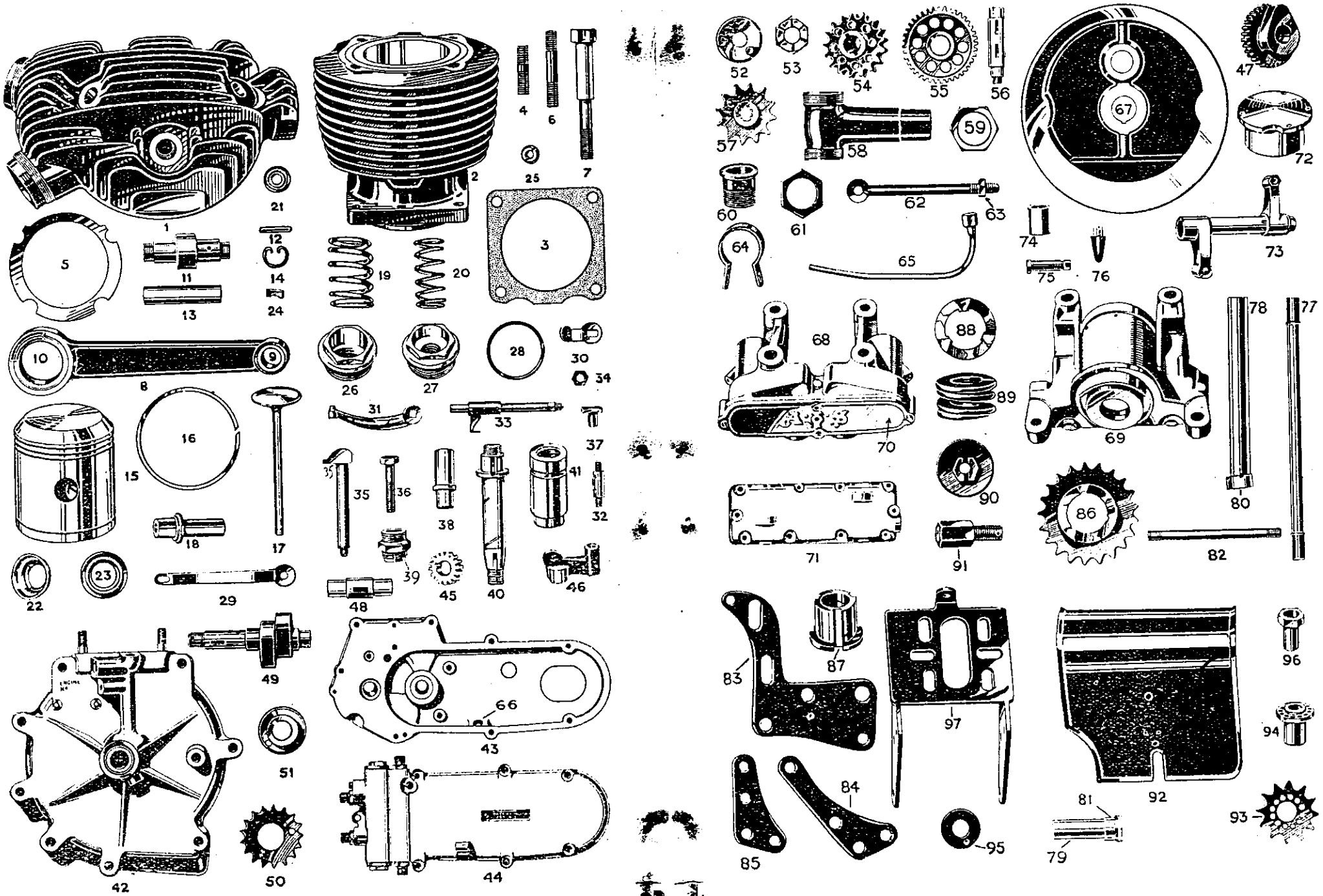

This scan is explicit for non-commercial use and is not intended for financial or material gain by anyone

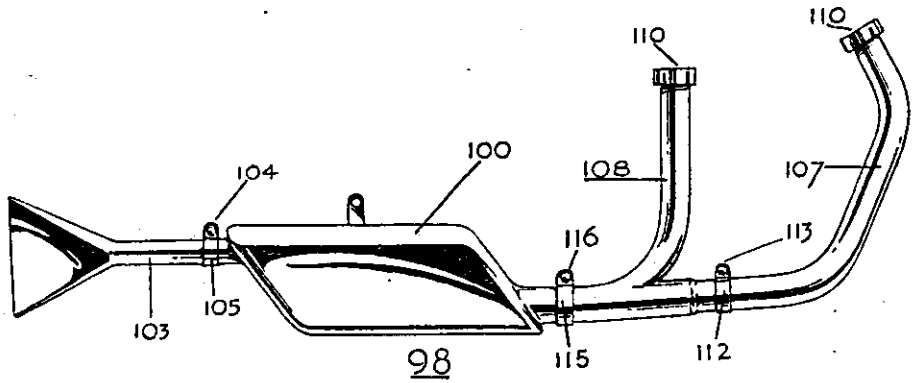

98

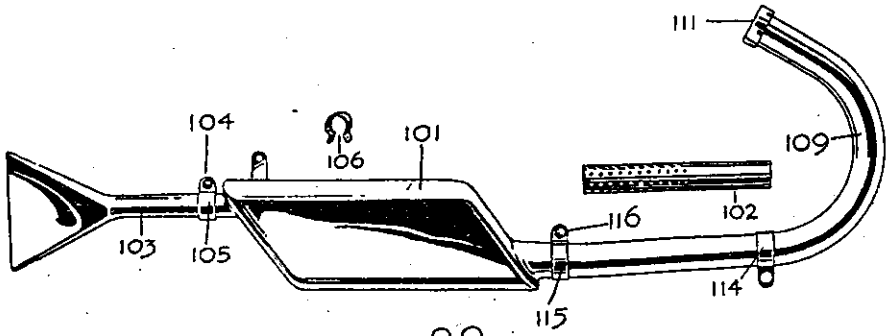

99

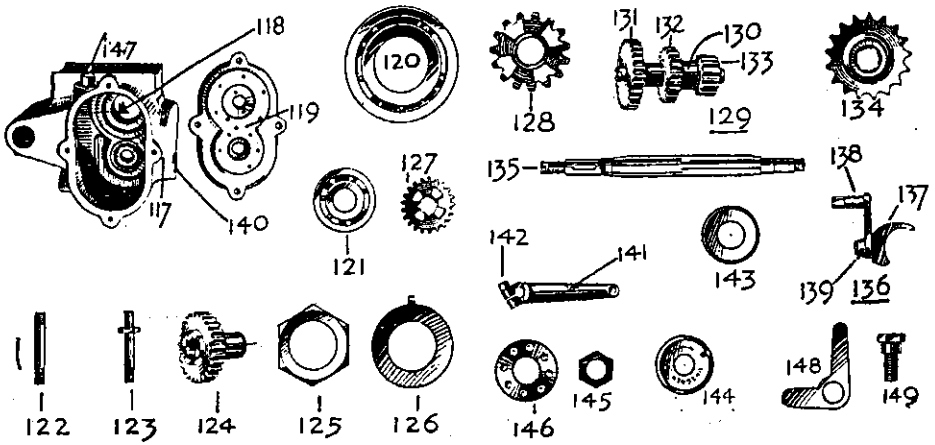

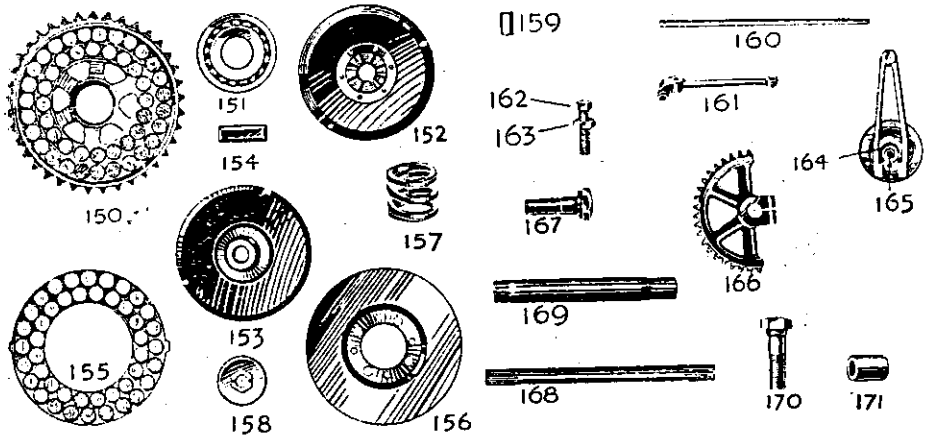

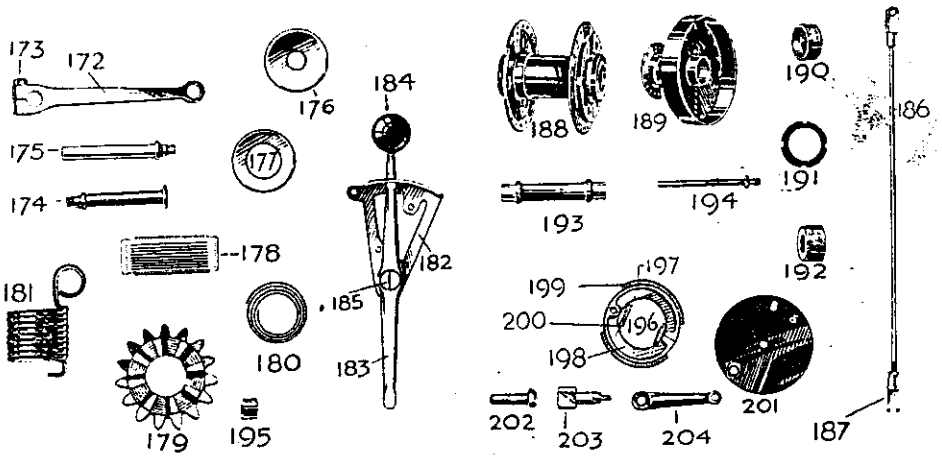

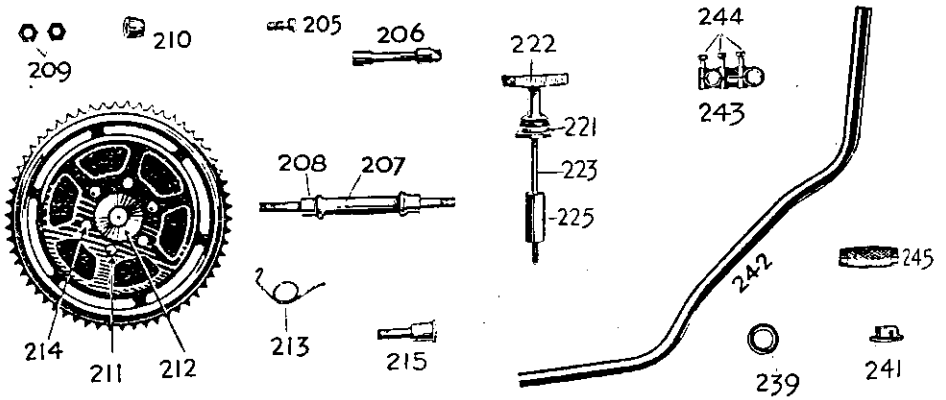

This scan is explicit for non-commercial use and is not intended for financial or material gain by anyone

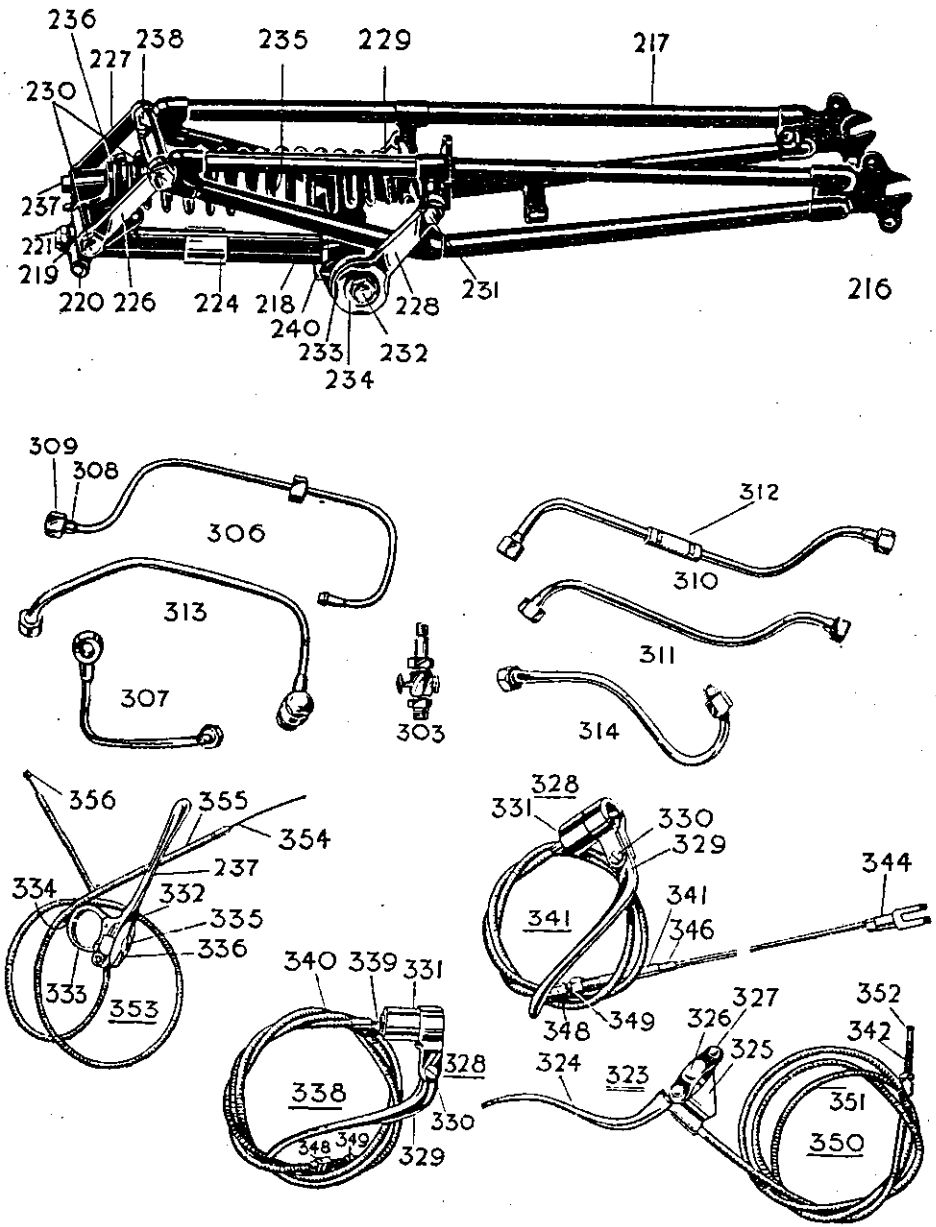

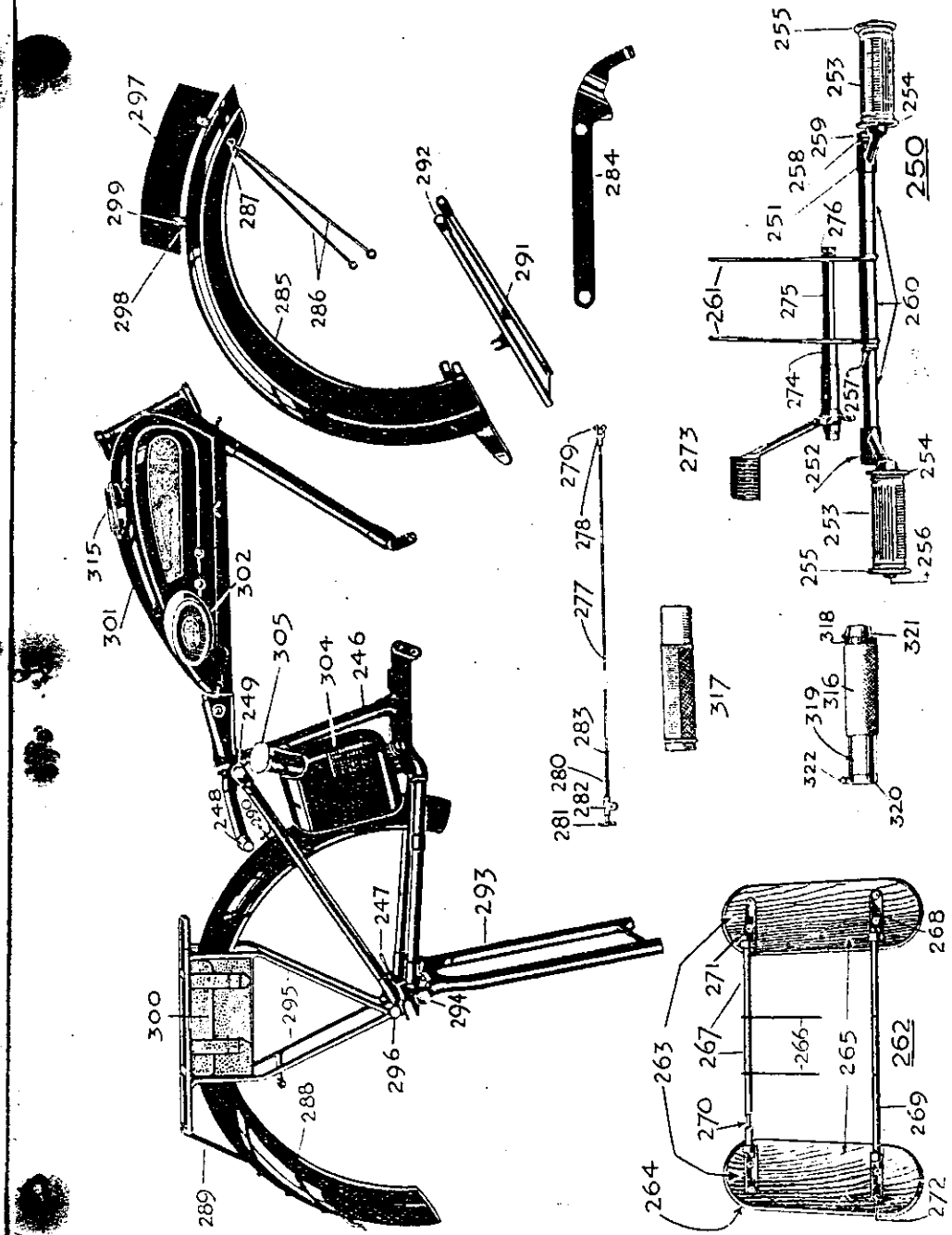

This scan is explicit for non-commercial use and is not intended for financial or material gain by anyone

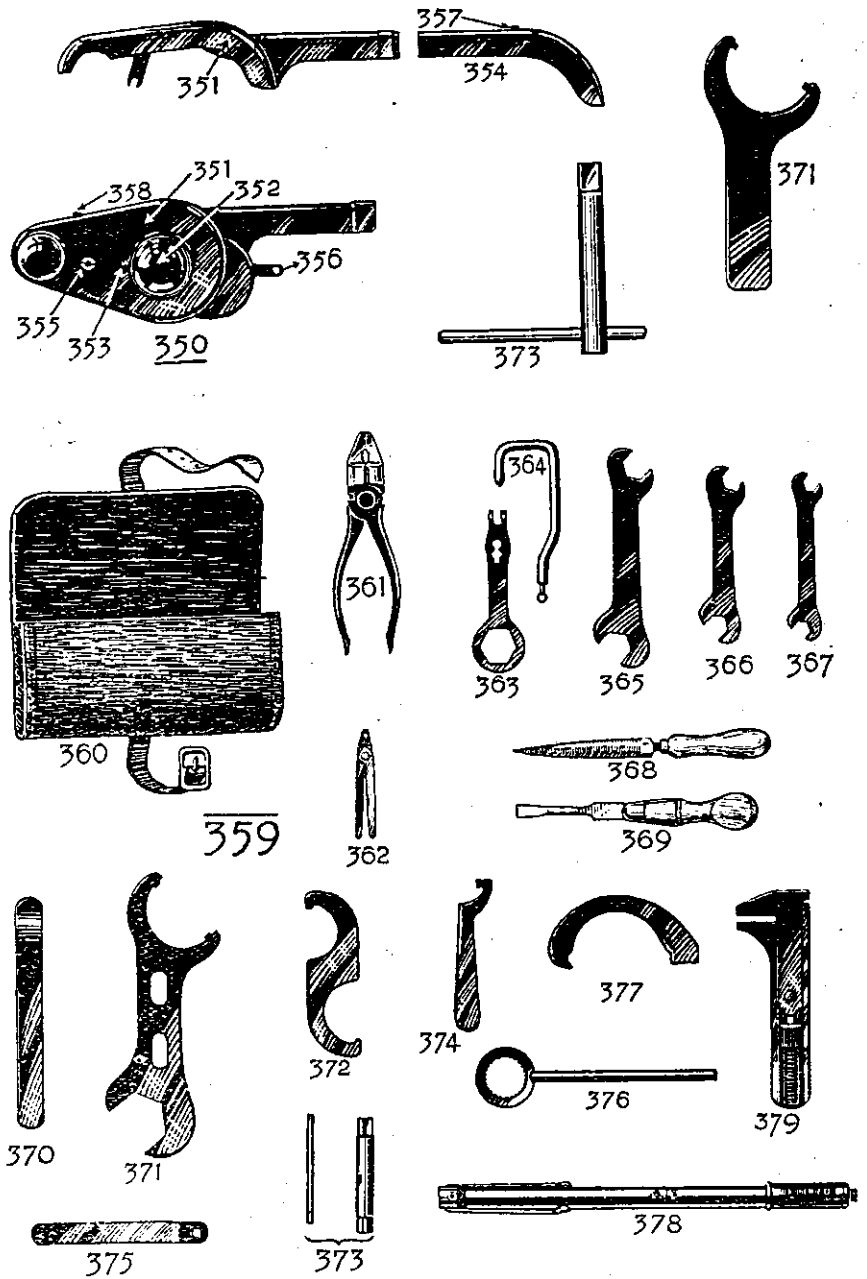

NOTE—Tool No. 371 in Top Right Hand Corner is not now supplied

SCHEDULE CONTAINING LIMITED GUARANTEE.

We give the following guarantee with our spare parts for Motor Cycles, Motor Cycle Combinations, and Sidecars, which is given in place of any implied conditions, warranties or liabilities whatsoever, statutary or otherwise, all such implied conditions, warranties and liabilities being in all cases excluded. Any statement, description, conditions or representation contained in any catalogue, advertisement, leaflet, or other publication shall not be construed as enlarging, varying, or overriding this guarantee. In the case of machines which have been used for "hiring out" purposes, or from which the trade mark, name, or manufacturing number has been removed, no guarantee of any kind is given or is to be implied.

We guarantee subject to the conditions mentioned below, that all usual and reasonable precautions have been taken by us to secure excellence of materials and workmanship, but this guarantee is to extend and be in force for six months only from date of purchase, and damages for which we make ourselves responsible under this guarantee are limited to the replacement of any part which may have proved defective, and any work involved by us in the replacement of such part or parts will be charged for. We undertake, subject to the conditions mentioned below, to make good at any time within six months any defects in these respects. As spare parts for Motor Cycle or Motor Cycle Combinations are easily liable to derangement by neglect or misuse, this guarantee does not apply to defects caused by wear or tear, misuse or neglect.

The term "misuse" shall include, amongst others, the following acts:—

(1) The attaching of a sidecar to the motor cycle in such a manner as to cause damage, or calculated to render the latter unsafe when ridden.

(2) The use of a motor cycle or of a motor cycle and sidecar combined, when carrying more persons or a greater weight than that for which the machine was designed by the Manufacturers.

(3) The attaching of a sidecar to a Motor Cycle by any form of attachment not provided or supplied by the Manufacturers or to a motor cycle which is not designed for such use.

(4) The use of spare parts or replacement parts not supplied by us.

Machines used in races are not guaranteed, but should any trouble arise through or because of racing, we will deal with such cases on their merits.

Any Motor Cycle, Motor Cycle Combination or Sidecar sent to us to be plated, enamelled or repaired, will be repaired upon the following conditions, *i.e.*, we guarantee that all precautions which are usual and reasonable have been taken by us to secure excellence of material and workmanship, such guarantee to extend and be in force for three months only from the time such work shall have been executed or until the expiration of the six months above referred to, and this guarantee is in lieu and in exclusion of any common law or statute, warranty, or condition, and the damages recoverable are limited to the cost of any further work which may be necessary to amend and make good the work found to be defective.

CONDITIONS OF GUARANTEE.

If a defective part should be found in our spares parts for Motor Cycles, Motor Cycle Combinations or Sidecars, or in any part supplied by way of exchange before referred to, it must be sent to us CARRIAGE PAID and accompanied by an intimation from the Owner that he desires to have it repaired or exchanged free of charge under our guarantee, and he must also furnish us at the same time with the number of the Machine, the date of the purchase, or the date when the alleged defective part was exchanged, as the case may be.

Failing compliance with the above, such articles will lie AT THE RISK OF THE OWNER and this guarantee and any implied guarantee, warranty or condition shall not be enforceable.

We do not guarantee the specialities of other firms such as magnetos, carburettors, tyres, saddles, chains, lamps, etc., or any component parts supplied to the order of the Purchaser differing from our standard specifications supplied with the spares parts for our Motor Cycles, Motor Cycle Combinations, Sidecars, or otherwise.